SMARTCOCKPIT.COM

A319/A320/A321

Fire Protection

DESCRIPTION

Aircraft Fire Protection Systems are comprised of :

- Fire and overheat detection and extinguishing systems for the :
  - Engines
  - APU
- Smoke detection and extinguishing systems for the :
  - Cargo compartments
  - Lavatories
- Smoke detection for the :
  - Avionic bay
- Portable fire extinguishers for the :
  - Flight compartment
  - Passenger cabin

DESCRIPTION

DETECTION

The engines and the APU each have a fire and overheat detection system consisting of :
- Two identical gas detection loops (A and B) mounted in parallel.
- A Fire Detection Unit (FDU).

The gas detection loops consist of :
- Three sensing elements for each engine, one in the pylon nacelle, one in the engine core and one in the engine fan section.
- One sensing element in the APU compartment.

When a sensing element is subjected to heat, it sends a signal to the fire detection unit.
R As soon as loops A and B detect temperature at a preset level, they trigger the fire warning system.
A fault in one loop (break or loss of electrical supply) does not affect the warning system. The unaffected loop still protects the aircraft.
If the system detects an APU fire while the aircraft is on the ground, it shuts down the APU automatically and discharges extinguishing agent.

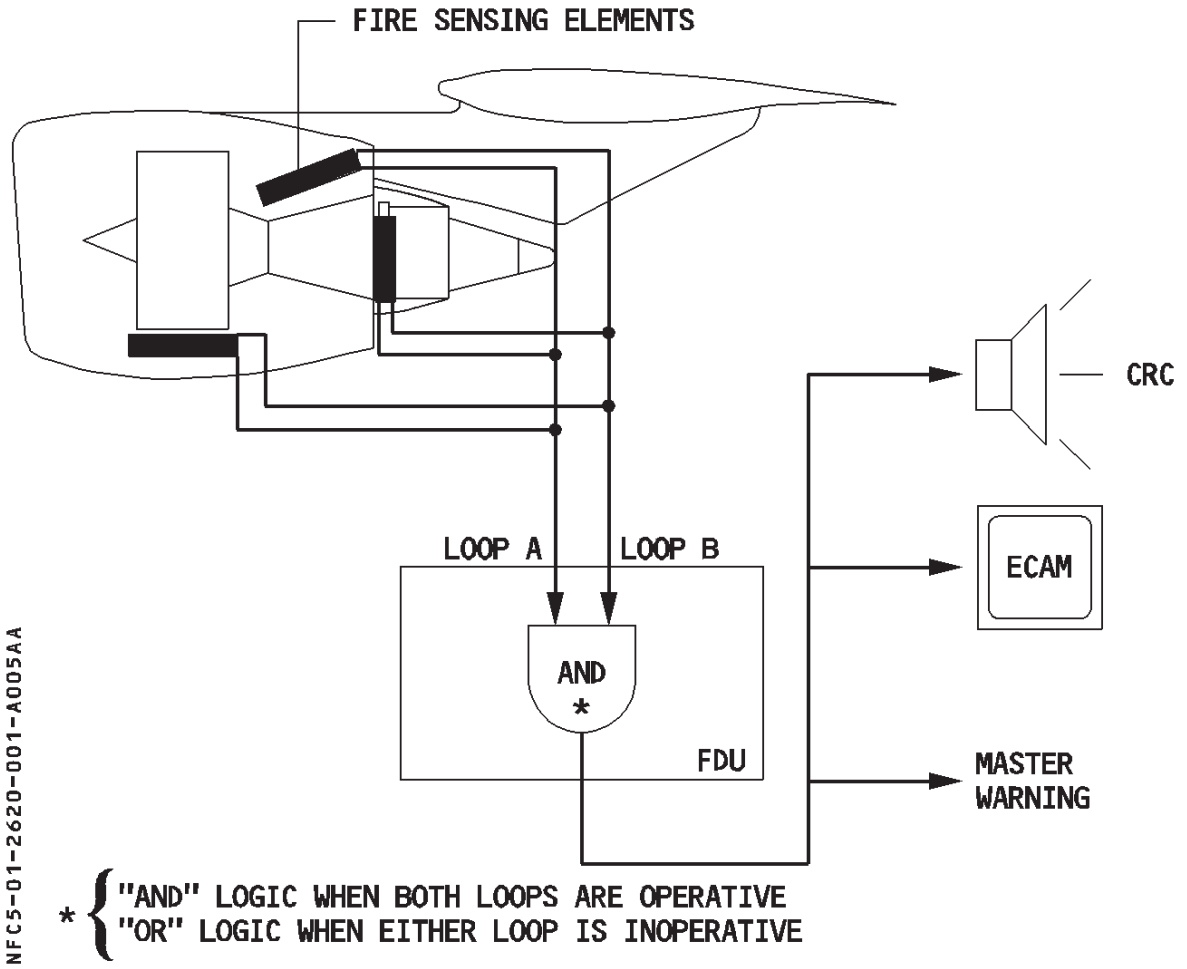

EXTINGUISHING

Each engine has two extinguisher bottles equipped with electrically operated squibs to discharge their contents. Each squib has a dual electric supply. The flight crew controls the discharge from the ENG FIRE panel in the cockpit.
The APU has one fire extinguisher bottle that has an electrically operated squib to discharge its agent. The flight crew controls the discharge from the APU FIRE panel in the
R cockpit. This bottle also discharges automatically if there is an APU fire when the aircraft is on the ground.

FIRE WARNINGS AND LOOP CAUTIONS

Fire detection units process all the warnings and cautions originating in the sensing elements :

- The fire warning appears in case of :
  - a fire signal from both loop A and B or,
  - a fire signal from one loop when the other is faulty, or
  - breaks in both loops occuring within 5 seconds of each other (flame effect), or
  - a test performed on the control panel.
- The loop-fault cautions appear if :
  - one loop is faulty or,
  - R both loops are faulty or,
  - the fire detection unit fails.

DESCRIPTION

DETECTION

The engines and the APU each have a fire and overheat detection system consisting of :
- Two identical gas detection loops (A and B) mounted in parallel.
- A Fire Detection Unit (FDU).

The gas detection loops consist of :
- Three sensing elements for each engine, one in the pylon nacelle, one in the engine core and one in the engine fan section.
- One sensing element in the APU compartment.

When a sensing element is subjected to heat, it sends a signal to the fire detection unit.
R As soon as loops A and B detect temperature at a preset level, they trigger the fire warning system.
A fault in one loop (break or loss of electrical supply) does not affect the warning system. The unaffected loop still protects the aircraft.
If the system detects an APU fire while the aircraft is on the ground, it shuts down the APU automatically and discharges extinguishing agent.

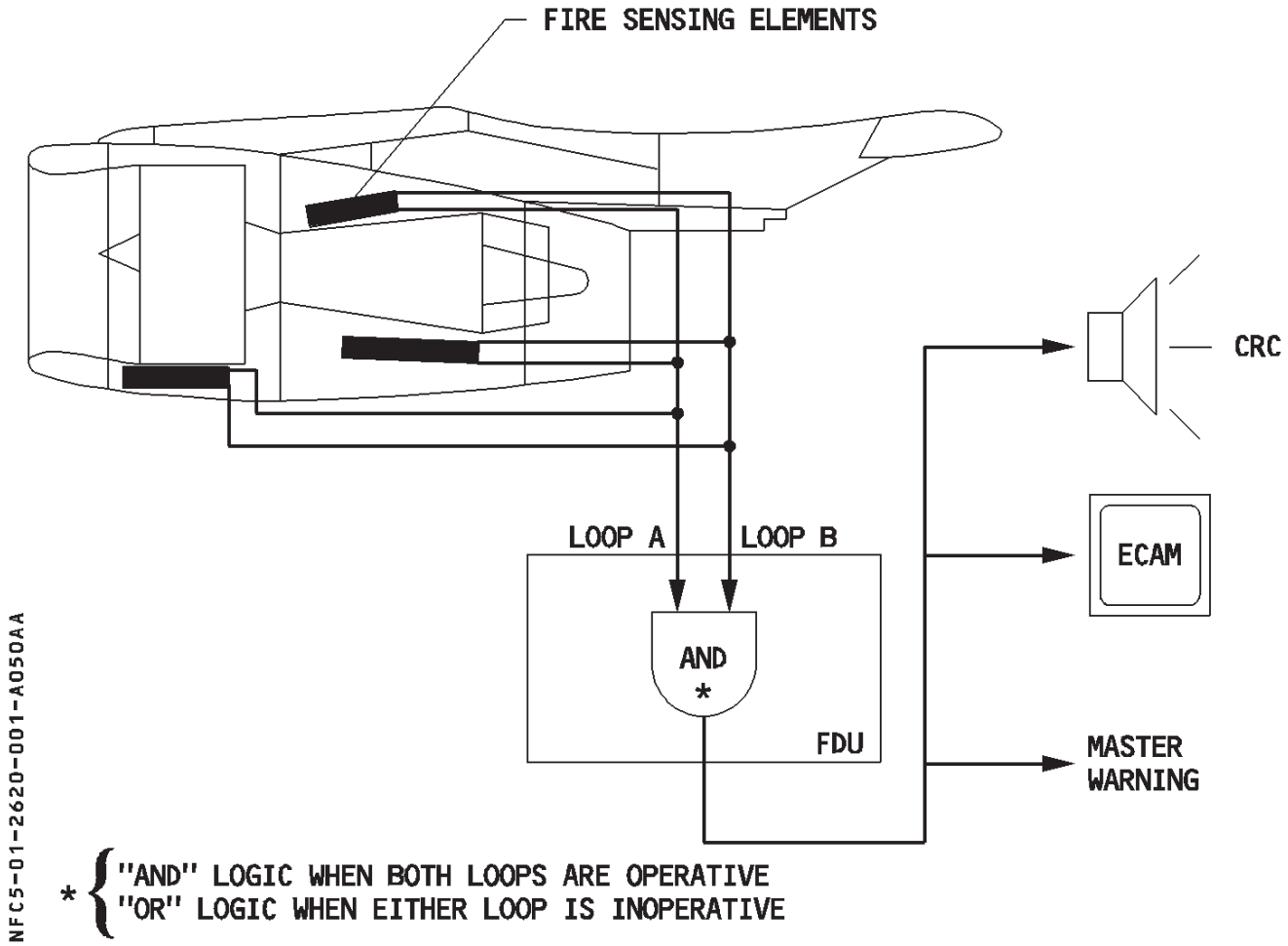

EXTINGUISHING

Each engine has two extinguisher bottles equipped with electrically operated squibs to discharge their contents. Each squib has a dual electric supply. The flight crew controls the discharge from the ENG FIRE panel in the cockpit.
The APU has one fire extinguisher bottle that has an electrically operated squib to discharge its agent. The flight crew controls the discharge from the APU FIRE panel in the
R cockpit. This bottle also discharges automatically if there is an APU fire when the aircraft is on the ground.

FIRE WARNINGS AND LOOP CAUTIONS

Fire detection units process all the warnings and cautions originating in the sensing elements :

- The fire warning appears in case of :
  - a fire signal from both loop A and B or,
  - a fire signal from one loop when the other is faulty, or
  - breaks in both loops occuring within 5 seconds of each other (flame effect), or
  - a test performed on the control panel.
- The loop-fault cautions appear if :
  - one loop is faulty or,
  - R both loops are faulty or,
  - the fire detection unit fails.

CONTROLS AND INDICATORS

OVERHEAD PANEL

ENG FIRE PANEL

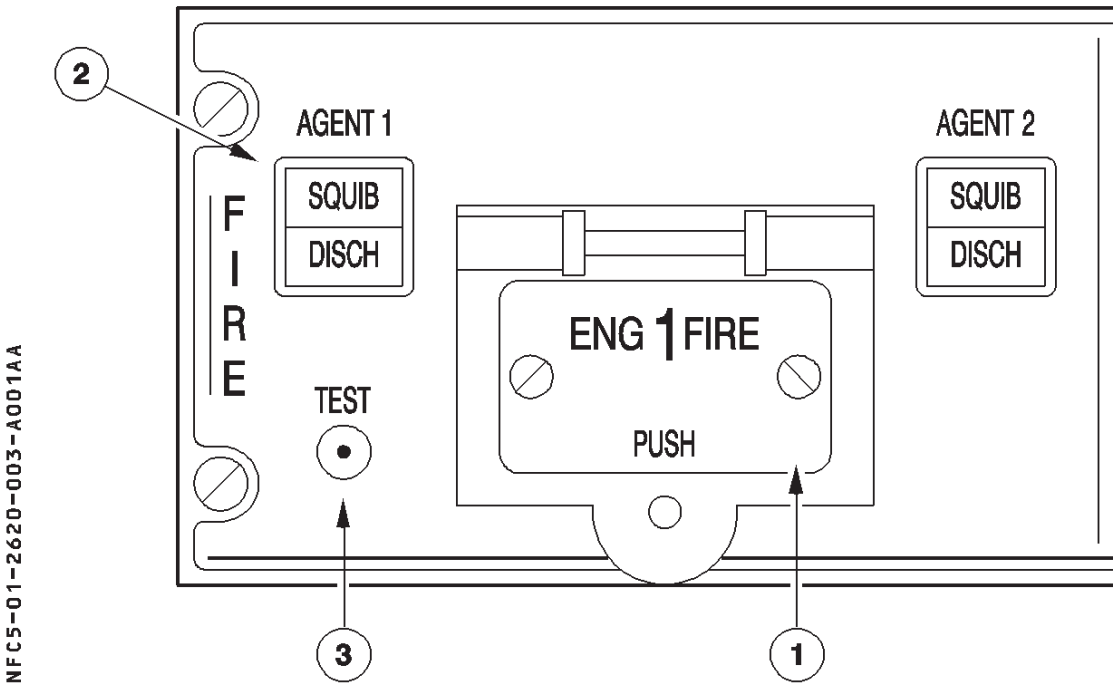

The aircraft has two identical ENG FIRE panels, which contain the following switches and indicators :

(1) ENG 1 (2) FIRE pb

This pushbutton's normal position is in, and guarded.
The pilot pushes it to release it. It pops out, sending an electrical signal that performs the following for the corresponding engine :
- Silences the aural fire warning
- Arms the fire extinguisher squibs
- Closes the low-pressure fuel valve
- Closes the hydraulic fire shut off valve
- Closes the engine bleed valve
- Closes the pack flow control valve
- R — Cuts off the FADEC power supply
- R — Deactivates the IDG

ENG 1 (2) FIRE lt

This red light comes on, regardless of the pushbutton's position, whenever the fire warning for the corresponding engine is activated.

② AGENT 1 and AGENT 2 pb

Both of these buttons become active when the flight crew pops the ENG FIRE button for their engine.
A brief push on the button discharges the corresponding fire bottle.
- "SQUIB" lights up white when the flight crew pops the ENG FIRE button for its engine to help the flight crew identify the AGENT pushbutton to be activated.
- "DISCH" lights up amber when its fire extinguisher bottle has lost pressure.

③ TEST pb

This button permits the flight crew to test the operation of the fire detection and extinguishing system.
- When the flight crew presses it :
  - A continuous repetitive chime sounds.
  - The MASTER WARN lights flash.
  - ENG FIRE warning appears on ECAM.

  On the FIRE panel :
  - The ENG FIRE pushbutton lights up red.
  - The SQUIB lights come on white if discharge supplies are available.
  - The DISCH lights come on amber.

  On the ENG panel (pedestal) :
  - The FIRE lights come on red.

CONTROLS AND INDICATORS

OVERHEAD PANEL

ENG FIRE PANEL

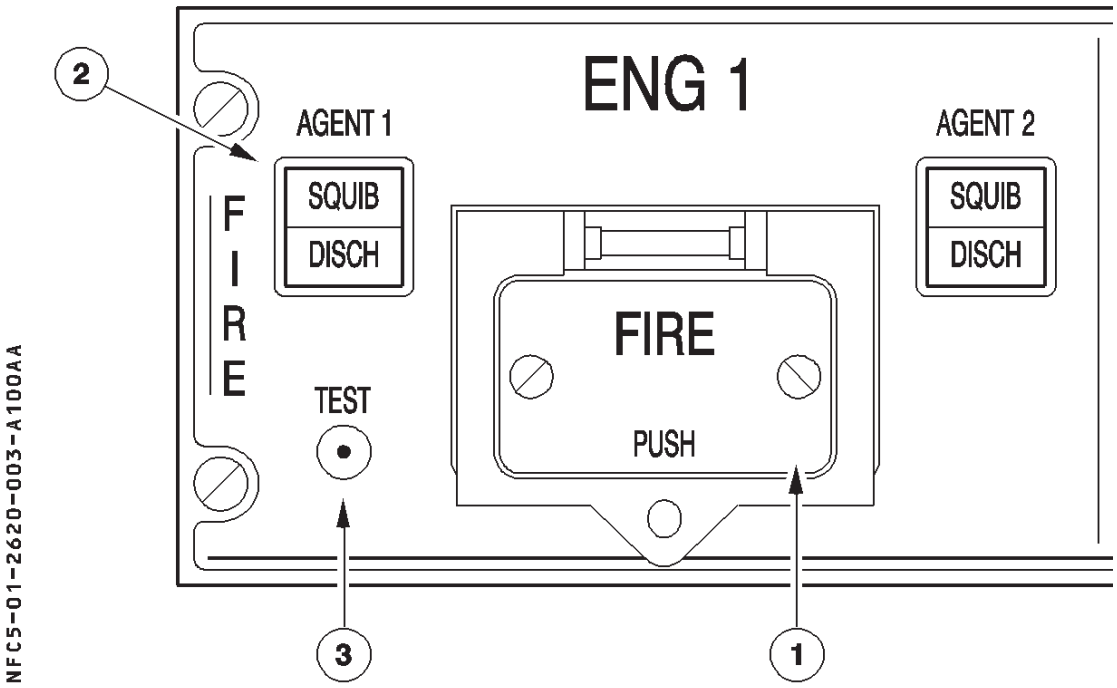

The aircraft has two identical ENG FIRE panels, which contain the following switches and indicators :

(1) ENG 1 (2) FIRE pb

This pushbutton's normal position is in, and guarded.
The pilot pushes it to release it. It pops out, sending an electrical signal that performs the following for the corresponding engine :
- Silences the aural fire warning
- Arms the fire extinguisher squibs
- Closes the low-pressure fuel valve
- Closes the hydraulic fire shut off valve
- Closes the engine bleed valve
- Closes the pack flow control valve
- R — Cuts off the FADEC power supply
- R — Deactivates the IDG

ENG 1 (2) FIRE lt

This red light comes on, regardless of the pushbutton's position, whenever the fire warning for the corresponding engine is activated.

② AGENT 1 and AGENT 2 pb

Both of these buttons become active when the flight crew pops the ENG FIRE button for their engine.
A brief push on the button discharges the corresponding fire bottle.
- "SQUIB" lights up white when the flight crew pops the ENG FIRE button for its engine to help the flight crew identify the AGENT pushbutton to be activated.
- "DISCH" lights up amber when its fire extinguisher bottle has lost pressure.

③ TEST pb

This button permits the flight crew to test the operation of the fire detection and extinguishing system.
- When the flight crew presses it :
  - A continuous repetitive chime sounds.
  - The MASTER WARN lights flash.
  - ENG FIRE warning appears on ECAM.

  On the FIRE panel :
  - The ENG FIRE pushbutton lights up red.
  - The SQUIB lights come on white if discharge supplies are available.
  - The DISCH lights come on amber.

  On the ENG panel (pedestal) :
  - The FIRE lights come on red.

APU FIRE PANEL

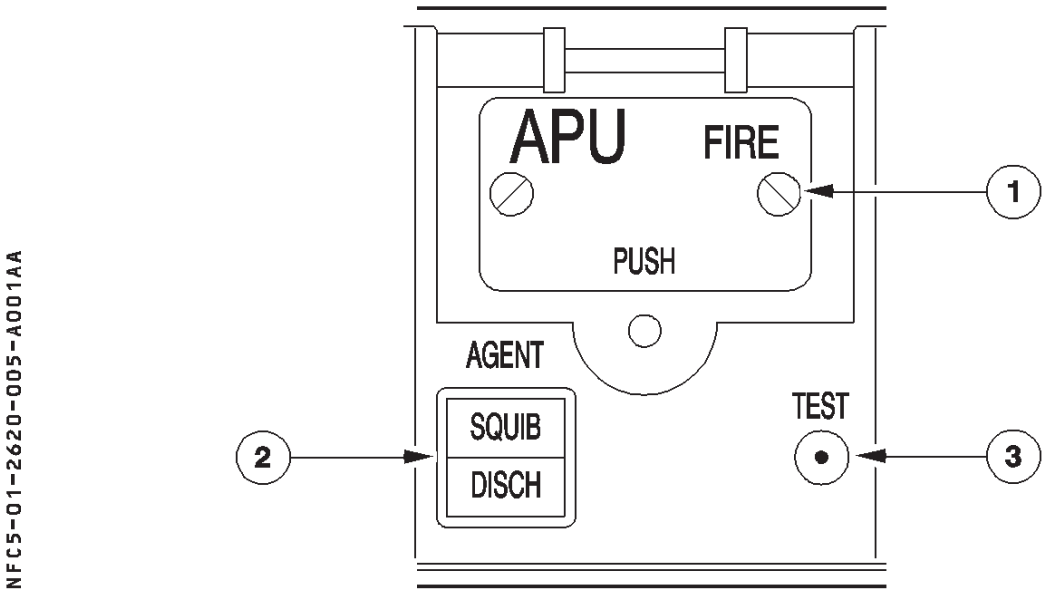

① APU FIRE pb sw

This pushbutton's normal position is in and guarded.
The pilot pushes it to release it. It pops out, sending an electrical signal that performs the following for the APU :
– shuts down the APU
– silences the aural warning
– arms the squib on the APU fire extinguisher
– closes the low-pressure fuel valve
– shuts off the APU fuel pump
– closes the APU bleed valve and X bleed valve and deactivates the APU generator.
The red APU FIRE light comes on when the APU fire warning is activated, regardless of the position of the pushbutton.

② AGENT pb

This pushbutton becomes active when the pilot pops the APU FIRE button.
The flight crew presses it briefly to discharge the fire bottle.
– SQUIB lights up white when the pilot pops the APU FIRE button.
– DISCH lights up amber when the fire extinguisher bottle has lost pressure.

R *Note : A red disk, which is outside at the rear of the fuselage, signals that the agent*
R *is not discharged overboard due to bottle overpressure.*

③ TEST pb

This button permits the flight crew to test the operation of the fire detection and extinguishing system for the APU.

- When the flight crew presses it :
  - A continuous repetitive chime sounds.
  - The MASTER WARN lights flash.
  - APU FIRE warning appears on ECAM.

  On the APU FIRE panel :
  - The APU FIRE pushbutton lights up red.
  - The SQUIB light comes on white.
  - The DISCH light comes on amber.

Note : The automatic shutdown of the APU on the ground will not occur while the flight crew is performing this test.

APU FIRE PANEL

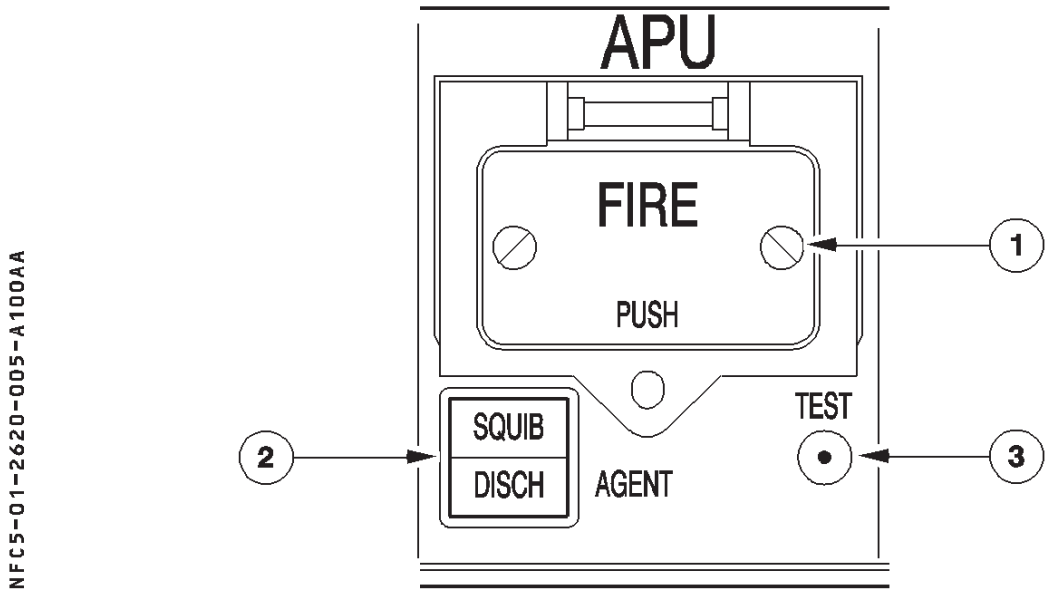

(1) APU FIRE pb sw

This switch's normal position is in and guarded.
The pilot pushes it to release it. It pops out, sending an electrical signal that performs the following for the APU :
– shuts down the APU
– silences the aural warning
– arms the squib on the APU fire extinguisher
– closes the low-pressure fuel valve
– shuts off the APU fuel pump
– closes the APU bleed valve and X bleed valve and deactivates the APU generator.
The red APU FIRE light comes when the APU fire warning is activated, regardless of the position of the pushbutton.

(2) AGENT pb

This button becomes active when the pilot pops the APU FIRE button.
The flight crew presses it briefly to discharge the fire bottle.
– SQUIB lights up white when the pilot pops the APU FIRE button.
– DISCH lights up amber on when the fire extinguisher bottle has lost pressure.

R *Note : A red disk, which is outside at the rear of the fuselage, signals that the agent*
R *is not discharged overboard due to bottle overpressure.*

③ TEST pb

This button permits the flight crew to test the operation of the fire detection and extinguishing system for the APU.

- When the flight crew presses it :
  - A continuous repetitive chime sounds.
  - The MASTER WARN lights flash.
  - APU FIRE warning appears on ECAM.

  On the APU FIRE panel :
  - The APU FIRE pushbutton lights up red.
  - The SQUIB light comes on white.
  - The DISCH light comes on amber.

Note : The automatic shutdown of the APU on the ground will not occur while the flight crew is performing this test.

PEDESTAL

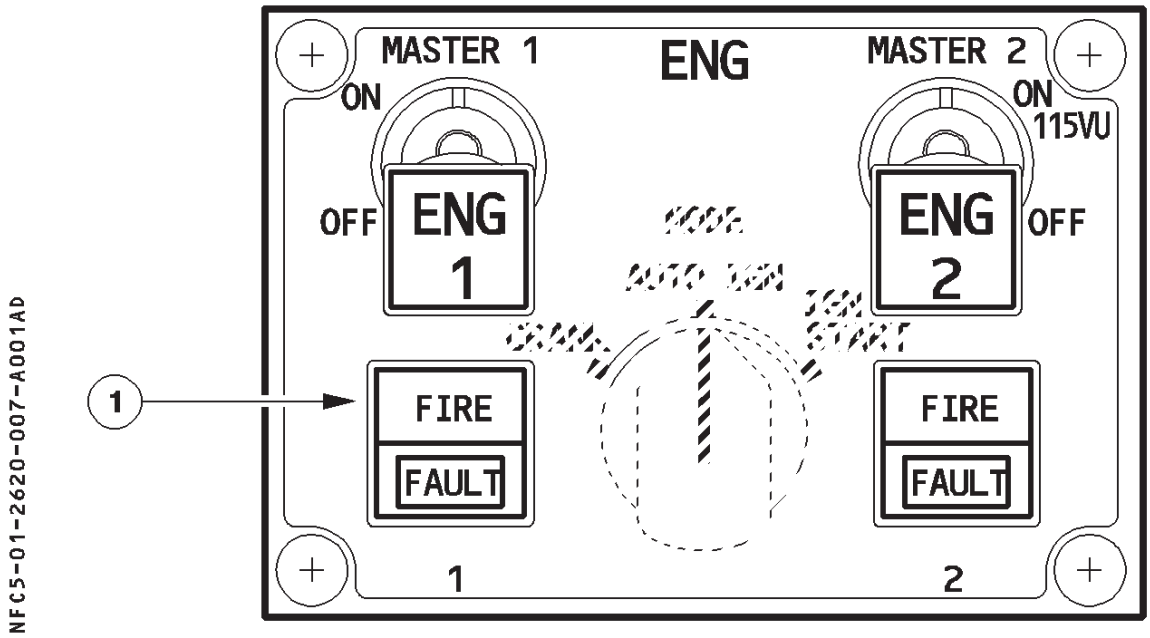

(1) FIRE lt

This light identifies the engine to be shutdown because of fire.
Light comes on red when an engine fire warning is triggered.

EXTERNAL POWER PANEL

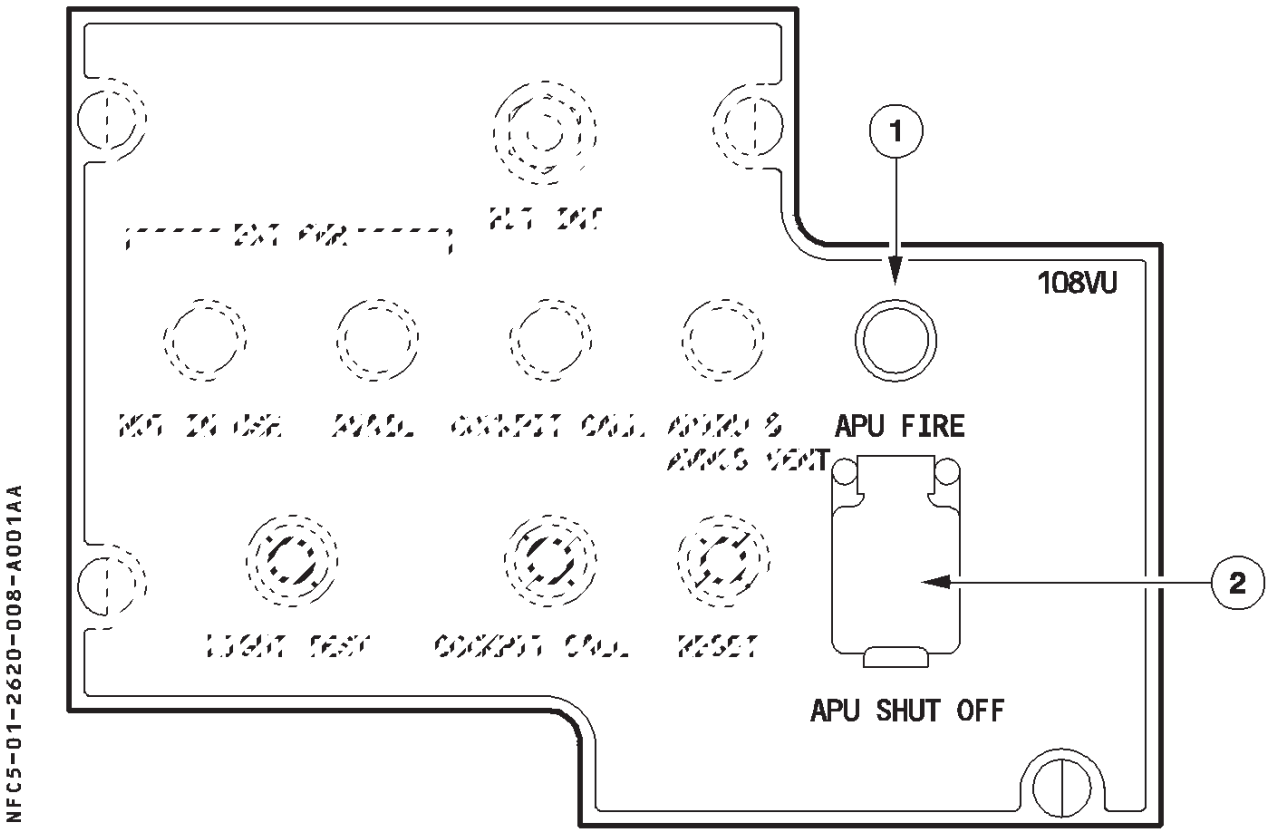

When the aircraft is on the ground, an APU fire causes an additional external warning.

(1) APU FIRE lt

The red APU FIRE light comes on and an external warning horn sounds when the system detects an APU fire.
The APU fire extinguisher discharges automatically three seconds after the appearance of the fire warning.
The light goes out when the fire has been extinguished.

(2) APU SHUT OFF guarded pushbutton

R This pushbutton is used for manual APU Emergency shutdown, if an emergency situation
R is detected on ground by the ground crew. When this pushbutton is pressed, the APU
R low pressure fuel shutoff valve closes, and the ECB receives a signal that starts the
R shutdown sequence. The shutdown sequence is the same as the APU automatic
R shutdown sequence, except that there is no cool down cycle. Pressing this pushbutton
R also silences the external warning horn.

MAINTENANCE PANEL

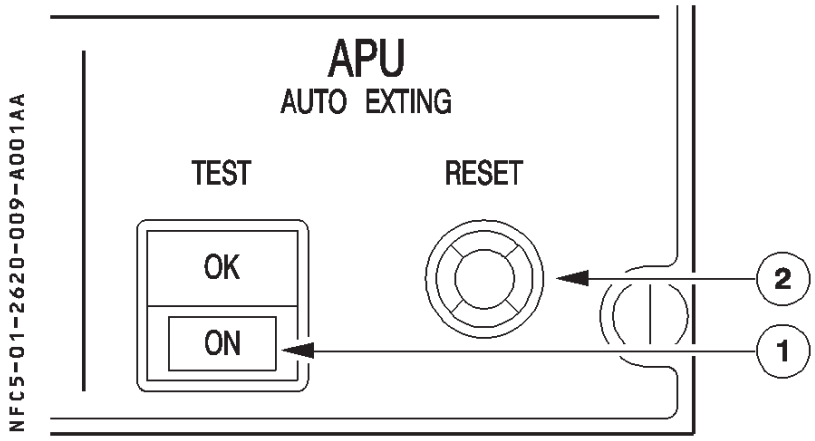

(1) TEST pushbutton-switch

R Tests the following APU circuits : Fire warning, auto extinguishing, and shutdown.
R The test sequence lasts for 10 seconds.
R During the test sequence, the APU MASTER switch must be ON.
R If all circuits are operating correctly, the OK light comes on.

Note : If the APU was running, it shuts down.

(2) RESET pushbutton

Resets, the test circuit.

WARNINGS AND CAUTIONS

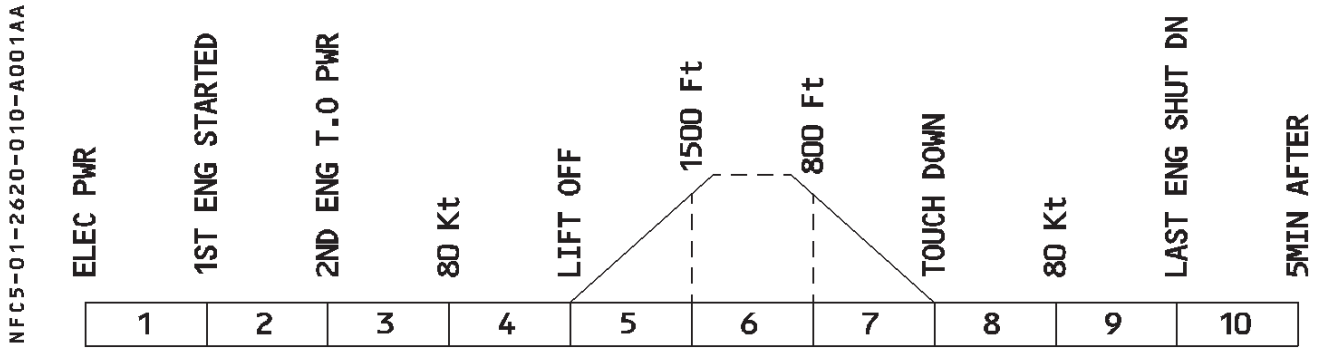

E / WD: FAILURE TITLE conditions	AURAL WARNING	MASTER LIGHT	SD PAGE CALLED	LOCAL WARNING	FLT PHASE INHIB
ENG 1 (2) FIRE Fire detected by both loops or by one loop, the other one being faulty, or break in both loops occuring within 5 seconds	CRC	MASTER WARN	ENGINE	FIRE lts on ENG FIRE pb and on ENG panel	NIL
APU FIRE Fire detected by both loops or by one loop, the other one being faulty, or break in both loops occuring within 5 seconds			APU	FIRE lt on APU FIRE pb	
ENG 1 (2) APU FIRE DET FAULT Both loops inoperative or Fire Detector Unit inoperative	SINGLE CHIME	MASTER CAUT	NIL	NIL	3, 4, 5, 7, 8
ENG 1 (2) APU LOOP A (B) FAULT	NIL	NIL			

DESCRIPTION

One smoke detector in the air extraction duct of the avionics ventilation system detects smoke in the avionics compartment.
It signals the ECAM to display a warning in the cockpit.
When it detects smoke for more than 5 seconds :
– A single chime sounds.
– The MASTER CAUTION lights, on the glareshield, light up.
– The ECAM displays a caution on the E/WD.
– The SMOKE light, on the EMER ELEC PWR panel, lights up.
– The BLOWER and EXTRACT FAULT, on the VENTILATION panel, light up.
If smoke is detected for more than 5 minutes, the caution can be cleared ; but, it remains latched, and can be recalled. On the ground, a dual FWC reset will unlatch the caution.

R

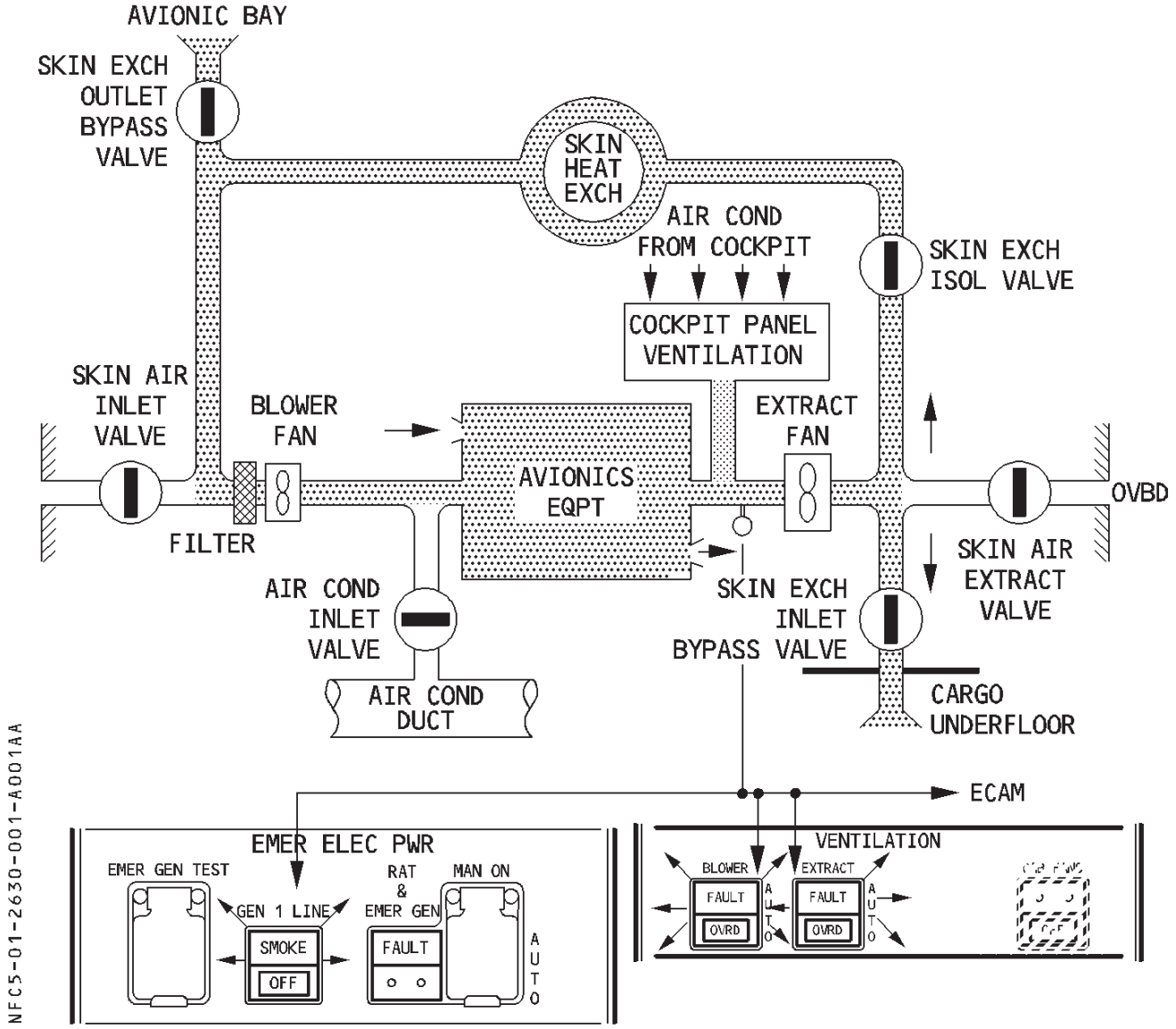

CONTROLS AND INDICATORS

OVERHEAD PANEL

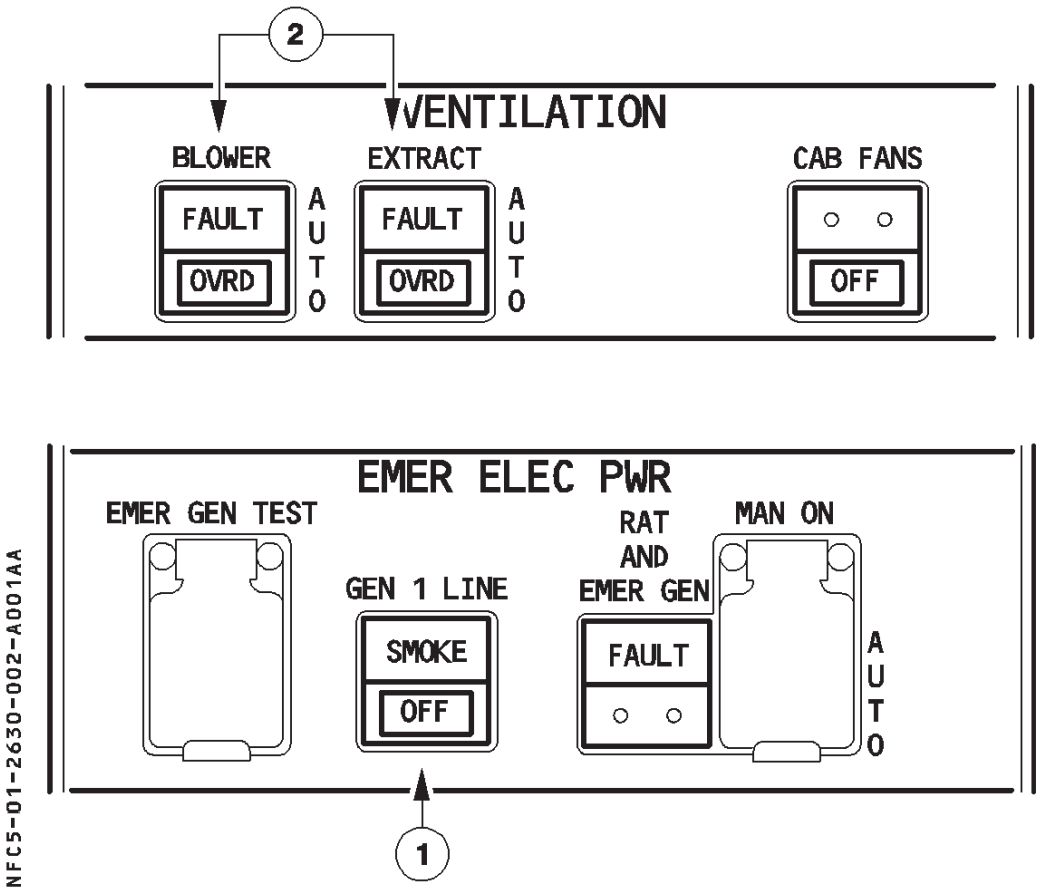

(1) GEN 1 LINE (See 1.24.10)

SMOKE lt : Comes on amber, along with a warning on ECAM, when smoke is detected in the avionics ventilation duct.

(2) BLOWER and EXTRACT pb sw (See 1.21.30)

FAULT lts : Both FAULT lights come on amber, along with a warning on ECAM, when smoke is detected in the avionics ventilation duct.

WARNINGS AND CAUTIONS

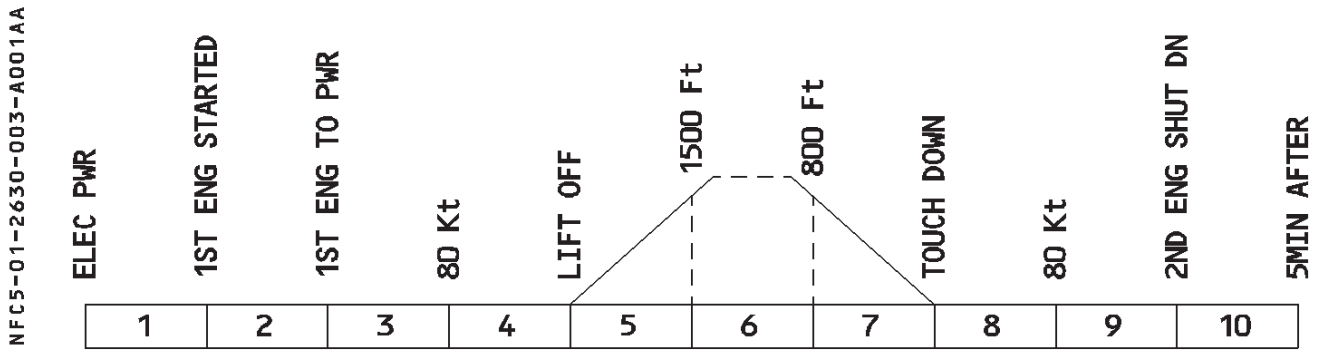

E / WD : FAILURE TITLE conditions	AURAL WARNING	MASTER LIGHT	SD PAGE CALLED	LOCAL WARNING	FLT PHASE INHIB
AVNCS SMOKE Smoke detected in ventilation extraction duct	SINGLE CHIME	MASTER CAUT	ELEC	. SMOKE lt on EMER ELEC PWR panel . FAULT lts on BLOWER and EXTRACT pb sw	4, 5, 7, 8

DESCRIPTION

SMOKE DETECTION

The lavatory smoke detection system consists of :

R — One smoke detector in each lavatory.

— A double channel Smoke Detection Control Unit (SDCU).

When a detector finds smoke in a lavatory, it sends a signal to the SDCU. The SDCU transmits it to the flight warning computer (for warning display in the cockpit) and to the CIDS (for warning in the cabin).

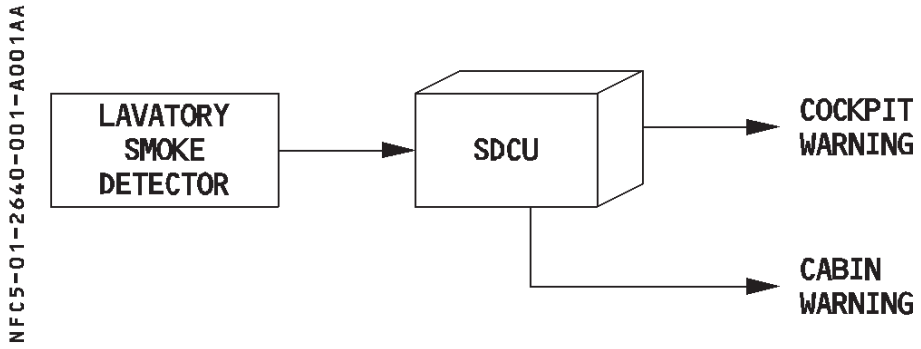

WASTEBIN FIRE EXTINGUISHING

Each lavatory wastebin has an automatic fire extinguishing system.

WARNINGS AND CAUTIONS

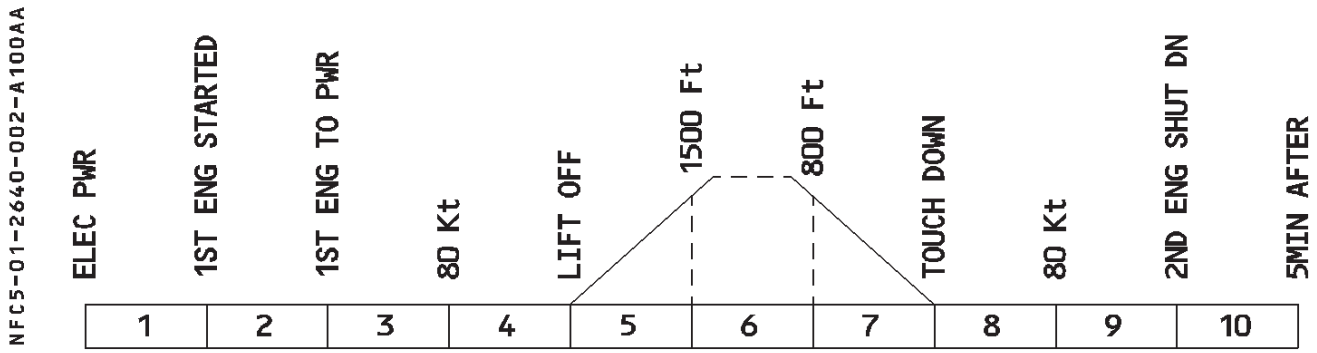

E / WD: FAILURE TITLE conditions	AURAL WARNING	MASTER LIGHT	SD PAGE CALLED	LOCAL WARNINGS	FLT PHASE INHIB
LAVATORY SMOKE ◁ Smoke detected in one lavatory	CRC	MASTER WARN	NIL	NIL	4, 5, 7, 8
LAVATORY DET FAULT Lavatory smoke detection fault or Lavatory and galley fan faulty	NIL	NIL			3, 4, 5, 7, 8
LAV + CRG DET FAULT Both SDCU channels failed	SINGLE CHIME	MASTER CAUT			

DESCRIPTION

SMOKE DETECTION

The lavatory smoke detection system consists of :

R — One smoke detector in each lavatory.

— A double channel Smoke Detection Control Unit (SDCU).

When a detector finds smoke in a lavatory, it sends a signal to the SDCU. The SDCU transmits it to the flight warning computer (for warning display in the cockpit) and to the CIDS (for warning in the cabin).

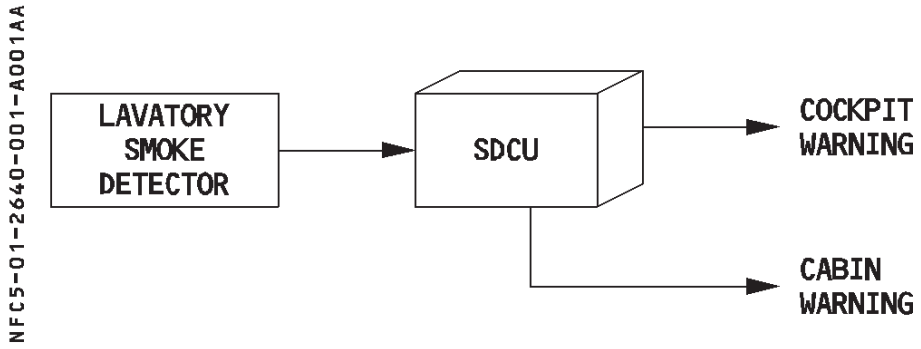

WASTEBIN FIRE EXTINGUISHING

Each lavatory wastebin has an automatic fire extinguishing system.

WARNINGS AND CAUTIONS

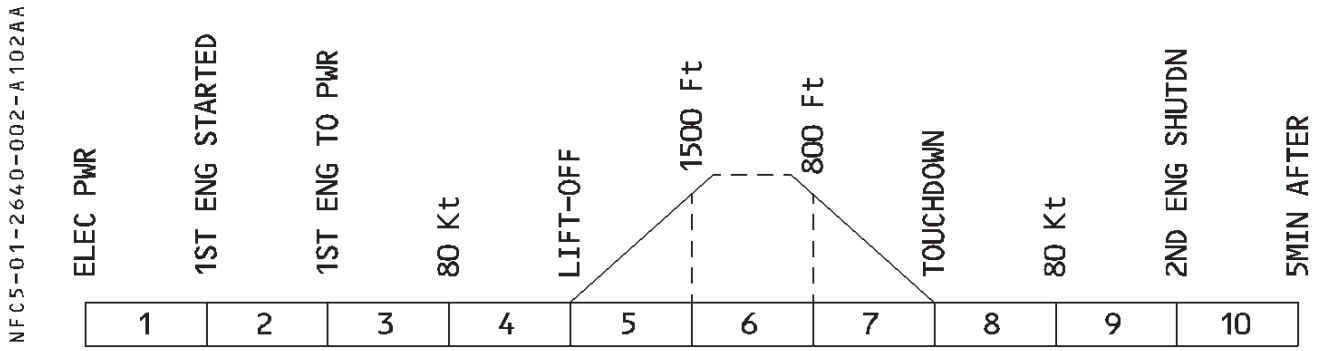

E / WD: FAILURE TITLE conditions	AURAL WARNING	MASTER LIGHT	SD PAGE CALLED	LOCAL WARNINGS	FLT PHASE INHIB
LAVATORY SMOKE Smoke detected in one lavatory.	CRC	MASTER WARN	NIL	NIL	4, 5, 7, 8
LAVATORY DET FAULT Lavatory smoke detection fault, or Lavatory and galley fan faulty.	NIL	NIL			3, 4, 5, 7, 8
LAV + CRG DET FAULT Both SDCU channels failed.	SINGLE CHIME	MASTER CAUT			

DESCRIPTION

SMOKE DETECTION

The lavatory smoke detection system consists of :
– One smoke detector in each lavatory.
– A CIDS Decoder Encoder Unit that links the detector to the entire CIDS system.
When a detector finds smoke in a lavatory, it sends a signal to the CIDS, which transmits it to the Flight Warning Computer (FWC), for Warning in the cockpit, and generates an indication in the cabin.

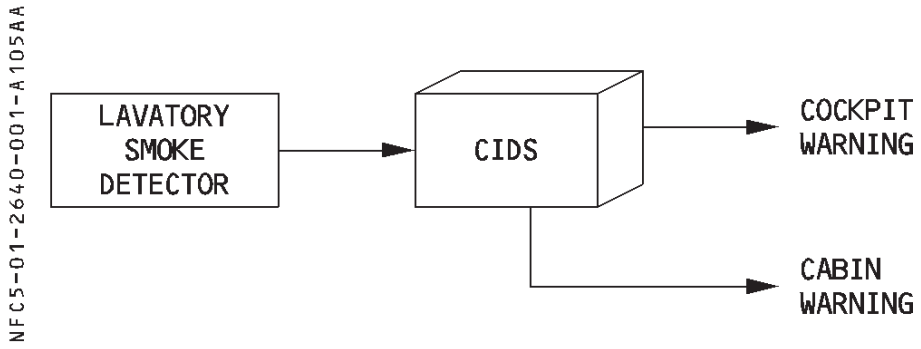

WASTEBIN FIRE EXTINGUISHING

Each lavatory wastebin has an automatic fire extinguishing system.

WARNINGS AND CAUTIONS

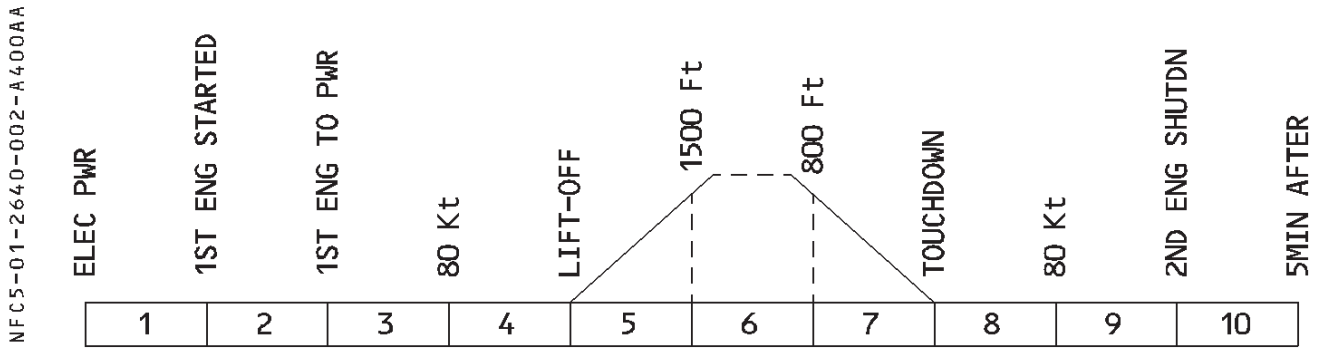

E / WD: FAILURE TITLE conditions	AURAL WARNING	MASTER LIGHT	SD PAGE CALLED	LOCAL WARNINGS	FLT PHASE INHIB
LAVATORY SMOKE Smoke detected in one lavatory.	CRC	MASTER WARN	NIL	NIL	4, 5, 7, 8
LAVATORY DET FAULT Lavatory smoke detection fault	NIL	NIL			3, 4, 5, 7, 8
LAV + CRG DET FAULT Both CIDS Smoke Detection functions are failed.	SINGLE CHIME	MASTER CAUT			

SMOKE DETECTION

The cargo compartments have a smoke detection system.

R – Cavities in the cargo compartment ceiling panels each hold two smoke detectors. Each detector is linked to one of the two detection loops (dual loop principle).
– The forward cargo compartment has one cavity.
– The aft cargo compartment has two cavities.
– The Smoke Detection Control Unit (SDCU) receives signals from the detectors and transmits them to the ECAM, which displays a warning in the cockpit. The SDCU has two identical channels.

Smoke in one cavity activates the cargo smoke warning if :
– Both smoke detectors detect it, or
– One smoke detector detects it and the other is inoperative.

If cargo ventilation is installed, and the cargo smoke warning is activated in either compartment, the associated isolation valves (◁) automatically close and the extraction fan stops. ◁

R

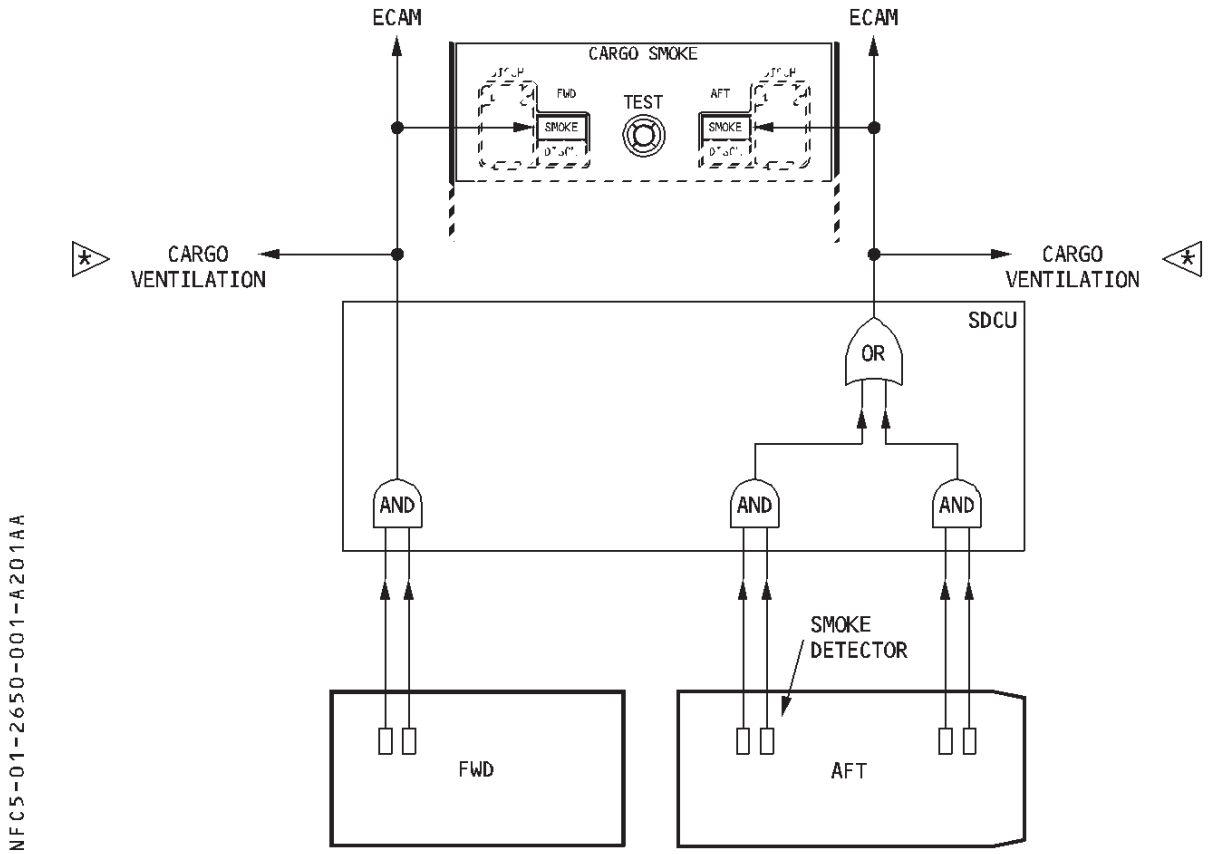

FIRE EXTINGUISHING

A fire extinguishing system protects the FWD and AFT cargo compartments.
One fire bottle supplies three nozzles (one in FWD compartment and two in AFT compartment). The bottle has two discharge heads, one for each compartment. When a member of the flight crew presses the DISCH pushbutton for either compartment, the action ignites the corresponding squib on the fire bottle, which then discharges extinguishing agent into that compartment.
When the bottle has discharged, the amber DISCH light comes on.

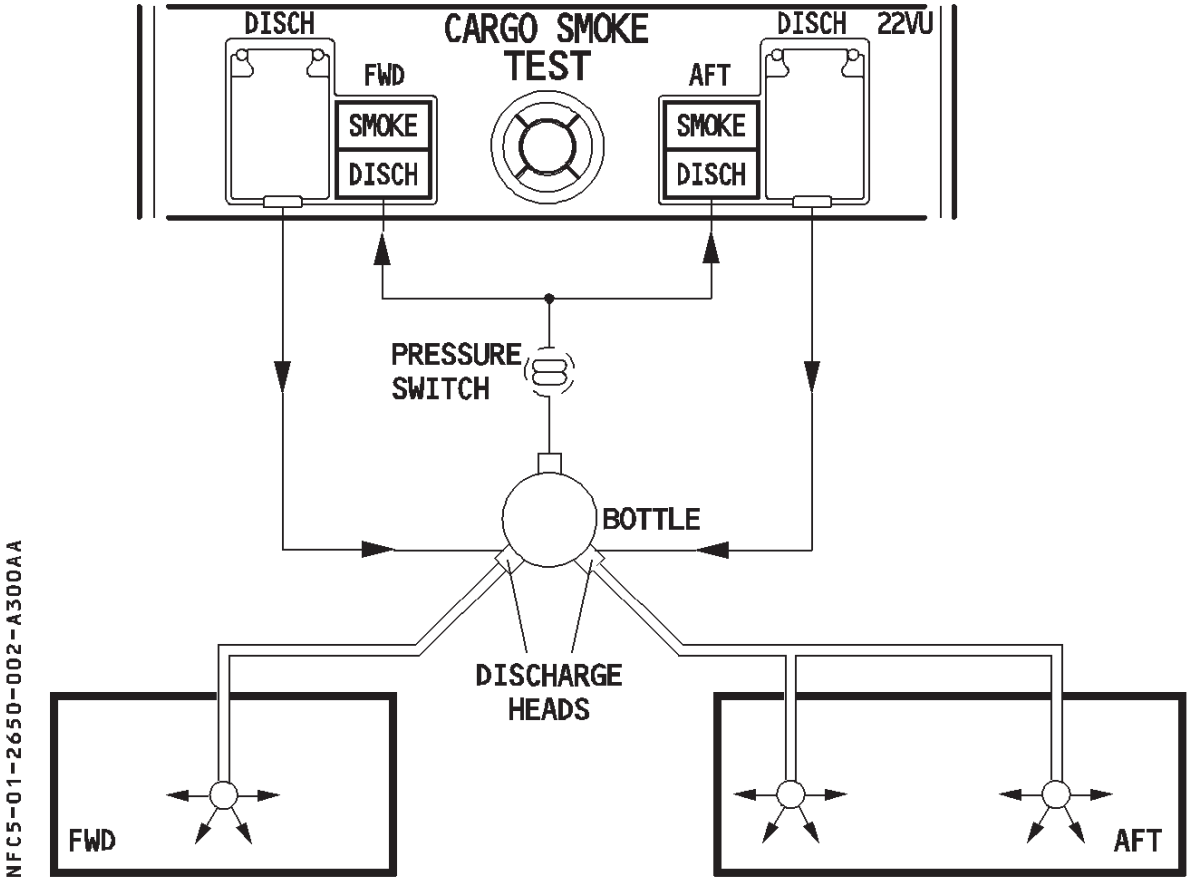

SMOKE DETECTION

The cargo compartments have a smoke detection system.

R – Cavities in the cargo compartment ceiling panels each hold two smoke detectors. Each detector is linked to one of the two detection loops (dual loop principle).
– The forward cargo compartment has one cavity.
– The aft cargo compartment has two cavities.
– The Smoke Detection Control Unit (SDCU) receives signals from the detectors and transmits them to the ECAM, which displays a warning in the cockpit. The SDCU has two identical channels.

Smoke in one cavity activates the cargo smoke warning if :
– Both smoke detectors detect it, or
– One smoke detector detects it and the other is inoperative.

If cargo ventilation is installed, and the cargo smoke warning is activated in either compartment, the associated isolation valves (◁) automatically close and the extraction fan stops. ◁

R

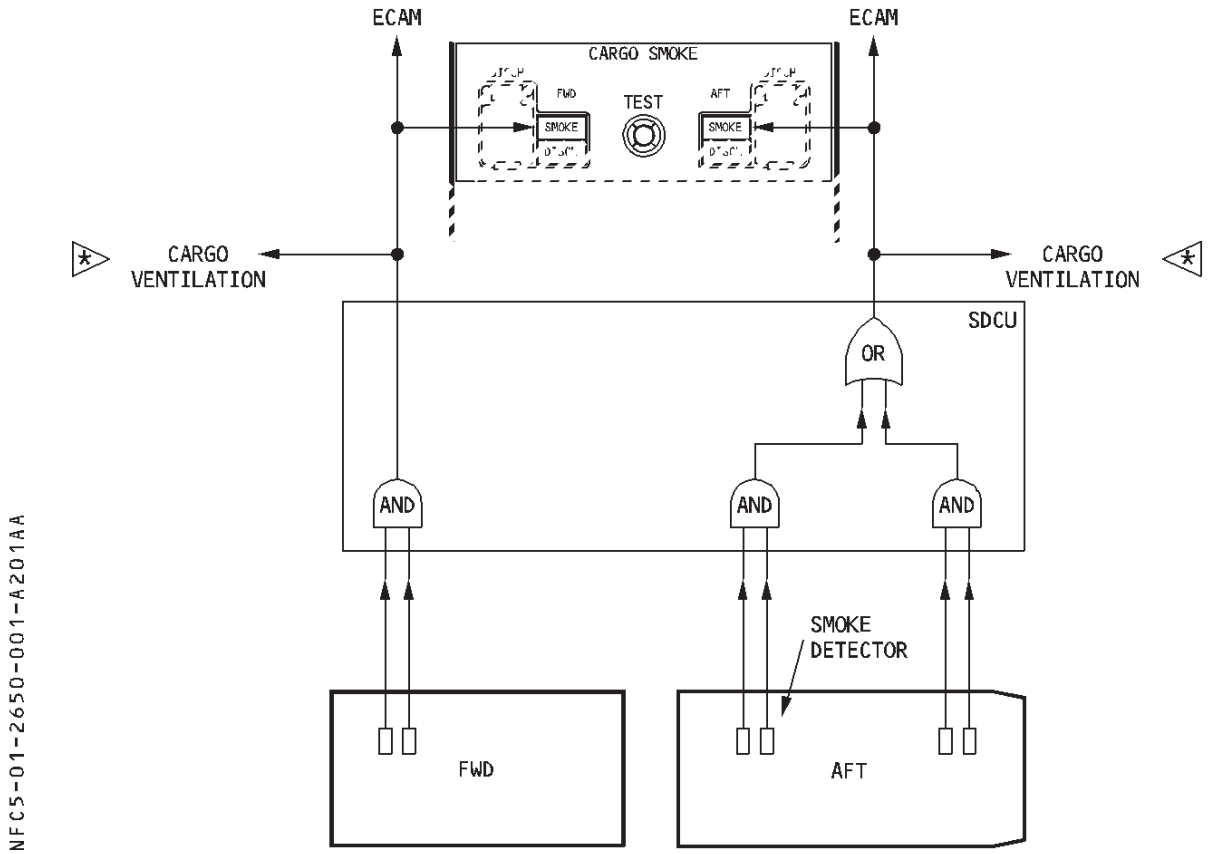

FIRE EXTINGUISHING

A fire extinguishing system protects the FWD and AFT cargo compartments.
Two fire bottles supply three nozzles (one in the FWD compartment, and two in AFT compartment). Each bottle has two discharge heads, one for each compartment.
When the FWD (AFT) SMOKE light comes on, the flight crew selects AGENT 1 with the corresponding toggle switch.
This action ignites the corresponding squib on the fire bottle, which then discharges extinguishing agent into that compartment.
R 60 minutes after the discharge of the first bottle, the DISCH AGENT 2 light appears. This
R is to indicate that the flight crew has to discharge AGENT 2 to maintain the required
R extinguishant concentration.
R Bottle 1 is discharged in approximately 60 seconds, whereas Bottle 2 discharges within approximately 90 minutes controlled by a flow metering system.
This ensures sufficient agent concentration for 205 minutes.

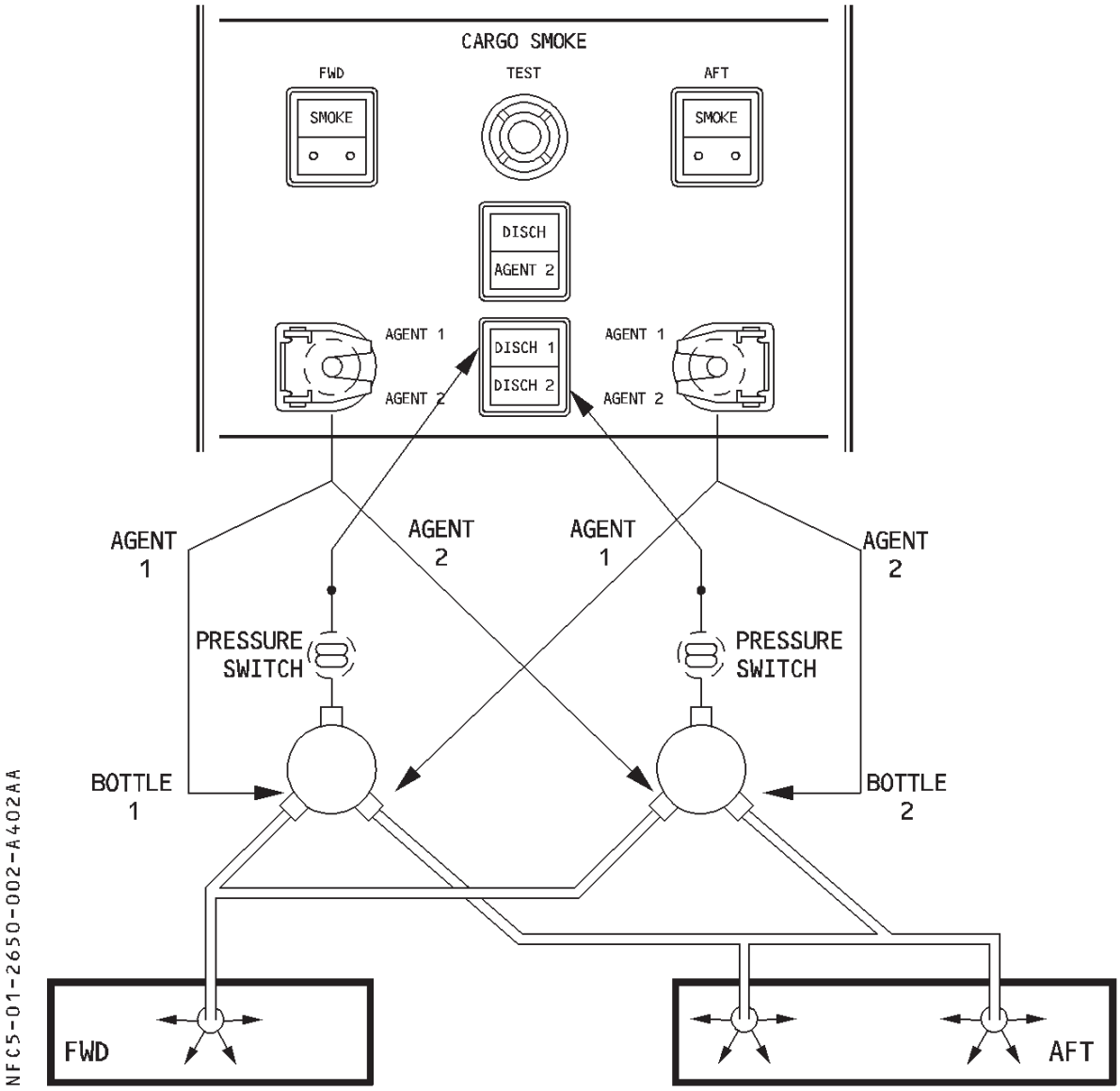

SMOKE DETECTION

The cargo compartments have a smoke detection system.

- Cavities in the cargo compartment ceiling panels each hold two smoke detectors. Each detector is linked to one of the two detection loops (dual loop principle).
- The forward cargo compartment has one cavity.
- The aft cargo compartment has two cavities.
- The Cabin Intercommunication Data System (CIDS) receives signals from the smoke detectors and transmits them to the ECAM, which displays a warning in the cockpit. The CIDS has two identical channels.

Smoke in one cavity activates the cargo smoke warning, if :

- Both smoke detectors detect it, or
- One smoke detector detects it, and the other is inoperative.

If cargo ventilation is installed, and the cargo smoke warning is activated in either compartment, the associated isolation valves (◁) automatically close and the extraction fan stops. ◁

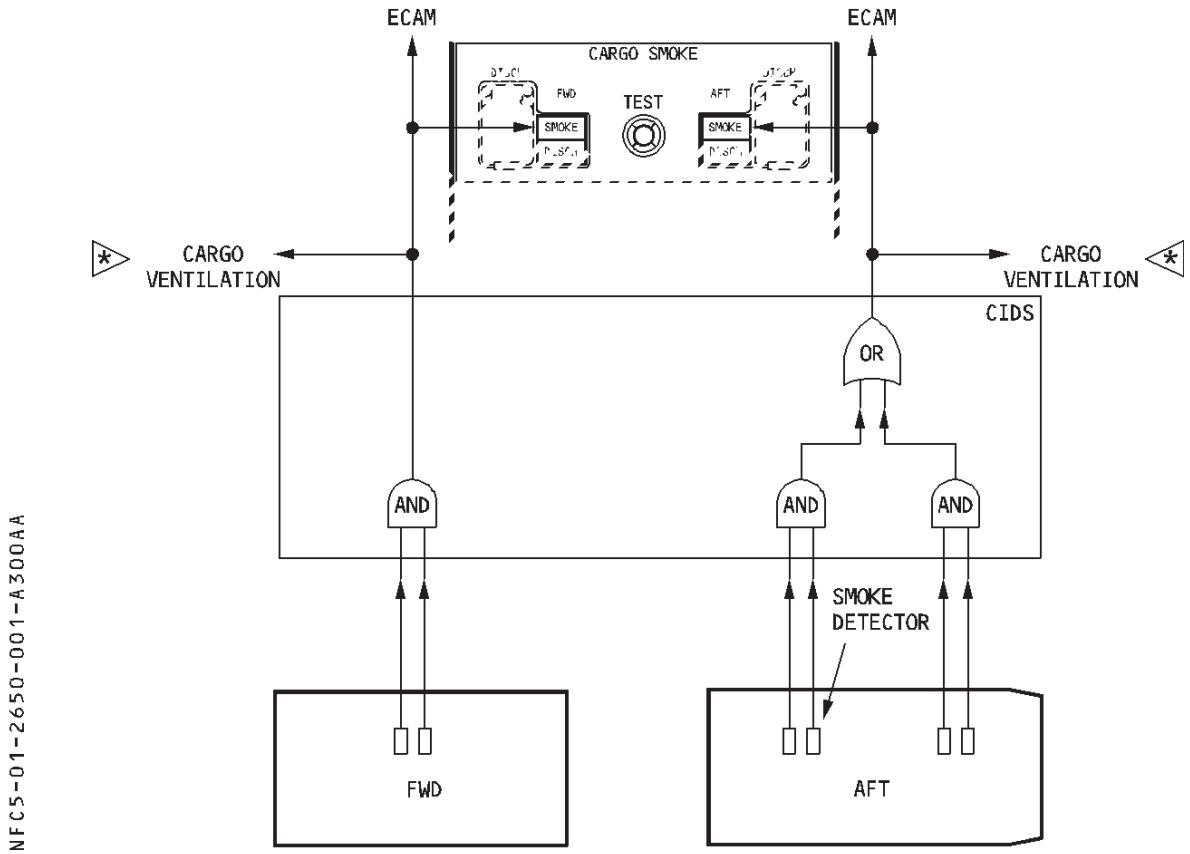

FIRE EXTINGUISHING

A fire extinguishing system protects the FWD and AFT cargo compartments.
One fire bottle supplies three nozzles (one in FWD compartment and two in AFT compartment). The bottle has two discharge heads, one for each compartment. When a member of the flight crew presses the DISCH pushbutton for either compartment, the action ignites the corresponding squib on the fire bottle, which then discharges extinguishing agent into that compartment.
When the bottle has discharged, the amber DISCH light comes on.

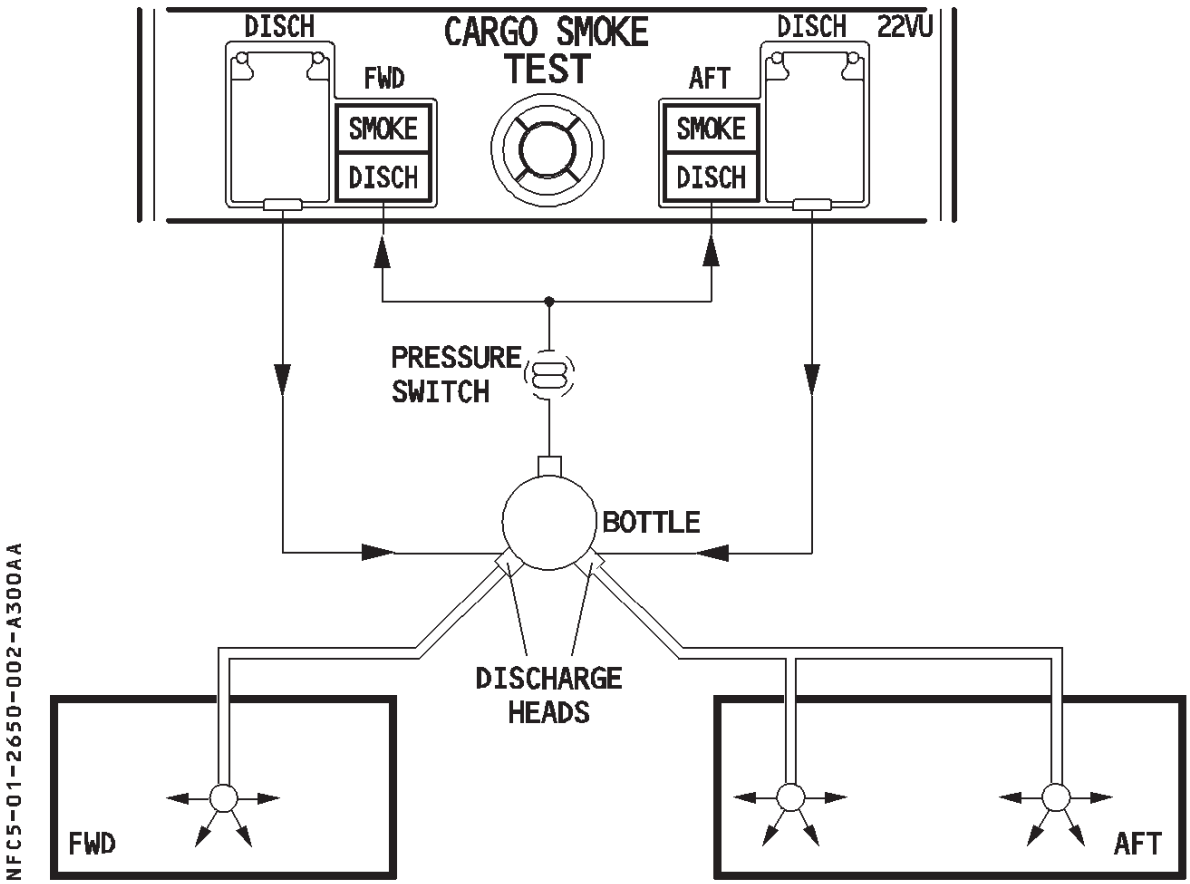

SMOKE DETECTION

The cargo compartments have a smoke detection system.

- Cavities in the cargo compartment ceiling panels each hold two smoke detectors. Each detector is linked to one of the two detection loops (dual loop principle).
- The forward cargo compartment has one cavity.
- The aft cargo compartment has two cavities.
- The Cabin Intercommunication Data System (CIDS) receives signals from the smoke detectors and transmits them to the ECAM, which displays a warning in the cockpit. The CIDS has two identical channels.

Smoke in one cavity activates the cargo smoke warning, if :

- Both smoke detectors detect it, or
- One smoke detector detects it, and the other is inoperative.

If cargo ventilation is installed, and the cargo smoke warning is activated in either compartment, the associated isolation valves (◁) automatically close and the extraction fan stops. ◁

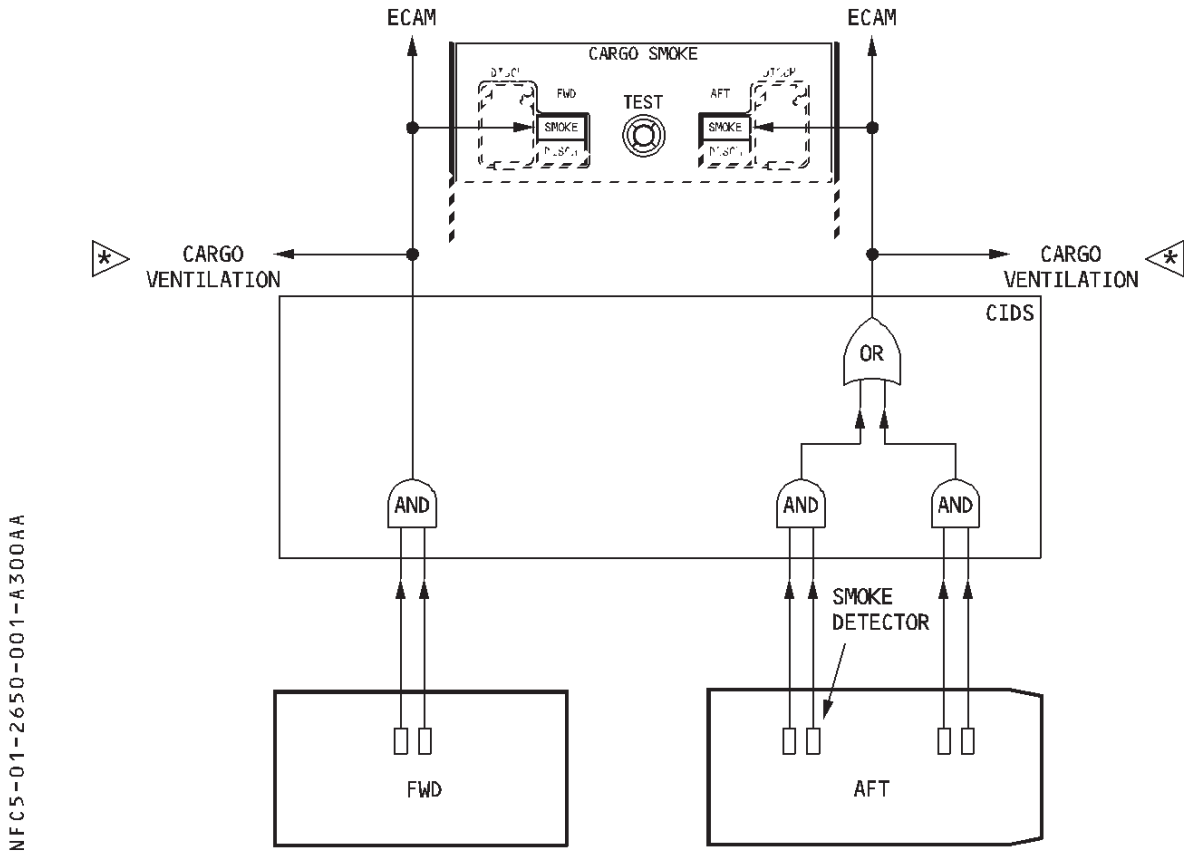

FIRE EXTINGUISHING

A fire extinguishing system protects the FWD and AFT cargo compartments.
Two fire bottles supply three nozzles (one in the FWD compartment, and two in AFT compartment). Each bottle has two discharge heads, one for each compartment.
When the FWD (AFT) SMOKE light comes on, the flight crew selects AGENT 1 with the corresponding toggle switch.
This action ignites the corresponding squib on the fire bottle, which then discharges extinguishing agent into that compartment.
R 60 minutes after the discharge of the first bottle, the DISCH AGENT 2 light appears. This
R is to indicate that the flight crew has to discharge AGENT 2 to maintain the required
R extinguishant concentration.
R Bottle 1 is discharged in approximately 60 seconds, whereas Bottle 2 discharges within approximately 90 minutes controlled by a flow metering system.
This ensures sufficient agent concentration for 205 minutes.

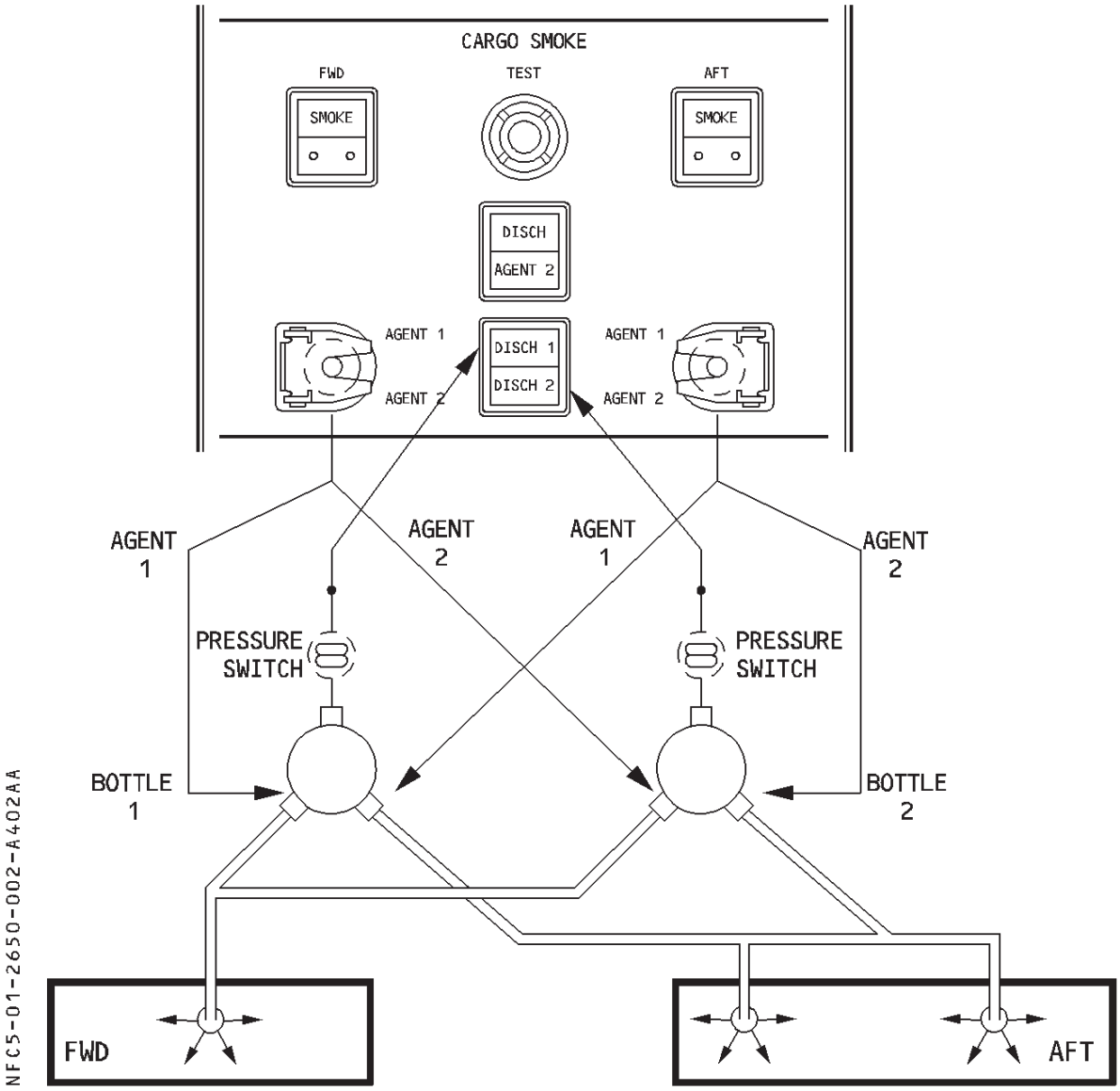

SMOKE DETECTION

The cargo compartments have a smoke detection system.

- Cavities in the cargo compartment ceiling panels each hold two smoke detectors. Each detector is linked to one of the two detection loops (dual loop principle).
- The forward cargo compartment has two cavities.
- The aft cargo compartment has three cavities.
- The Cabin Intercommunication Data System (CIDS) receives signals from the smoke detectors and transmits them to the ECAM, which displays a warning in the cockpit. The CIDS has two identical channels.

Smoke in one cavity activates the cargo smoke warning if :

- Both smoke detectors detect it, or
- One smoke detector detects it and the other is inoperative.

If cargo ventilation is installed, and the cargo smoke warning is activated in either compartment, the associated isolation valves (◁) automatically close and the extraction fan stops. ◁

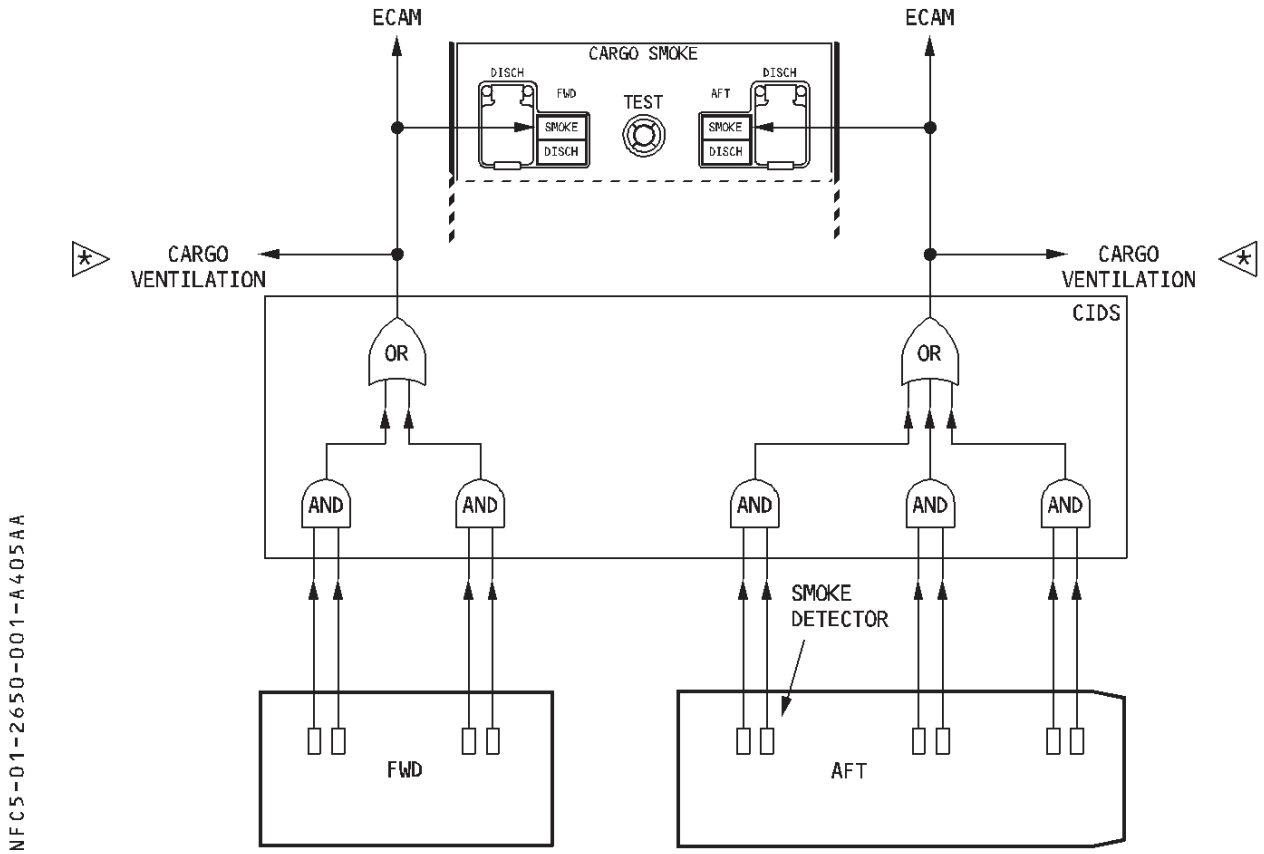

FIRE EXTINGUISHING

A fire extinguishing system protects the FWD and AFT cargo compartments.
One fire bottle supplies three nozzles (one in FWD compartment and two in AFT compartment). The bottle has two discharge heads, one for each compartment. When a member of the flight crew presses the DISCH pushbutton for either compartment, the action ignites the corresponding squib on the fire bottle, which then discharges extinguishing agent into that compartment.
When the bottle has discharged, the amber DISCH light comes on.

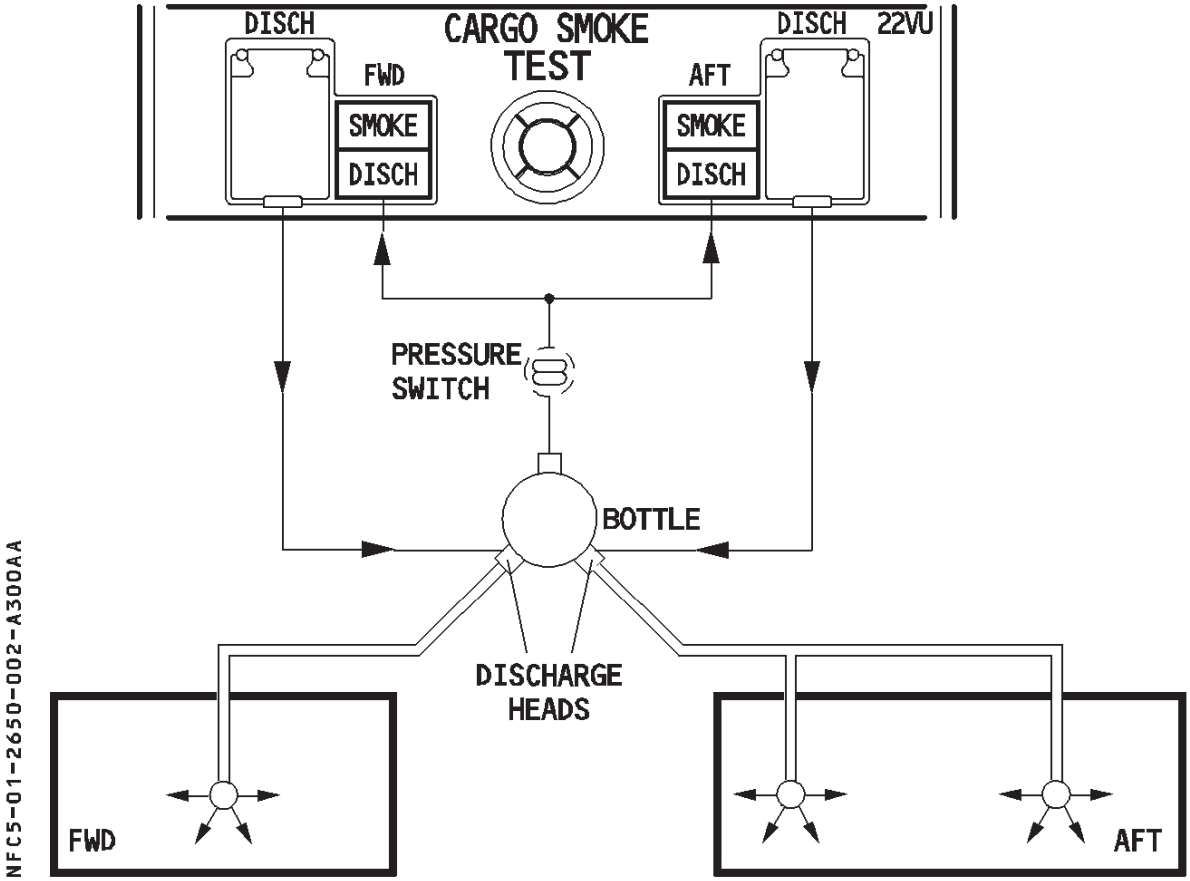

CONTROLS AND INDICATORS

OVERHEAD PANEL

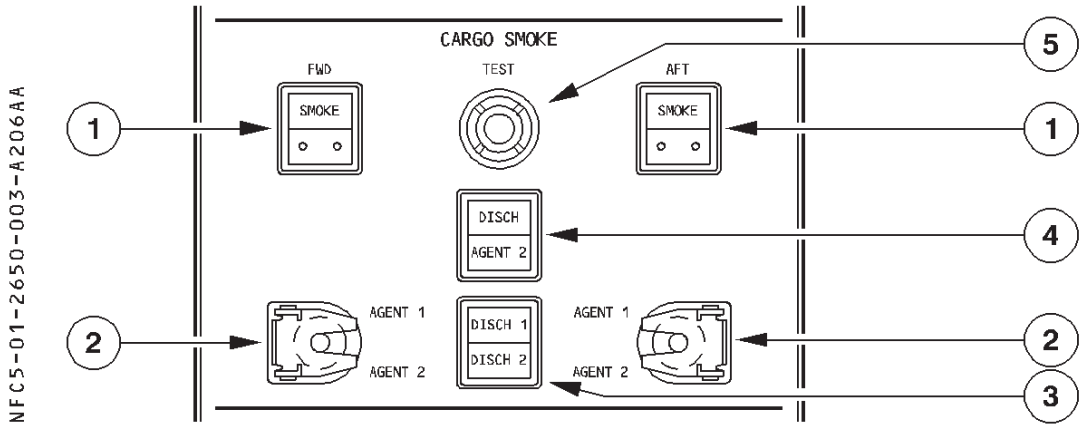

(1) SMOKE light

This red light, and the associated ECAM warning, come on when the system detects smoke in the indicated compartment. This light comes on, if :
- Both channels detect smoke, or
- One channel detects smoke and the SDCU finds that the other channel is faulty.

(2) DISCH toggle switch

The guarded toggle switch permits ignition of the corresponding squib for discharge of extinguishing agent 1(2) in the respective compartment (FWD or AFT).

(3) DISCH light

R This amber light comes on when the bottle has discharged. DISCH 1 appears within 60
R seconds after Agent 1 activation, whereas DISCH 2 appears approximately 40 minutes
R after Agent 2 activation.

(4) DISCH AGENT 2 light

This light comes on amber, 60 minutes after the discharge of Agent 1 in either the FWD or AFT cargo compartment. It goes off, when the Agent 2 squib is ignited.

(5) TEST pushbutton

Pressing this button for at least 3 seconds, and until it is released :
- Tests the smoke detectors in sequence,
- Turns on the red smoke lights twice, and displays the ECAM warning,
- Closes the ventilation system's isolation valves ◁ .
- Turns on the amber DISCH lights.

WARNINGS AND CAUTIONS

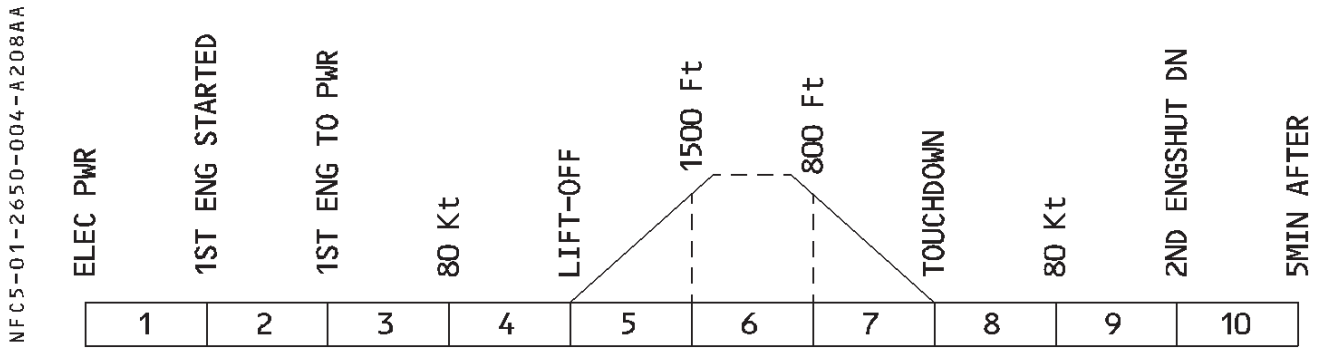

R

E / WD: FAILURE TITLE conditions	AURAL WARNING	MASTER LIGHT	SD PAGE CALLED	LOCAL WARNING	FLT PHASE INHIB
FWD (AFT) CARGO SMOKE Smoke detected	CRC	MASTER WARN	COND	SMOKE lt on CARGO SMOKE panel	4, 5, 7, 8
FWD (AFT) CRG DET FAULT Smoke detection fault	NIL	NIL	NIL	NIL	3, 4, 5, 7, 8
LAV + CRG DET FAULT Both SDCU channels failed.	SINGLE CHIME	MASTER CAUTION			
FWD (AFT) BTL SQUIB FAULT Forward or aft agent 1(2) bottle squib failed					4, 5, 7, 8

CONTROLS AND INDICATORS

OVERHEAD PANEL

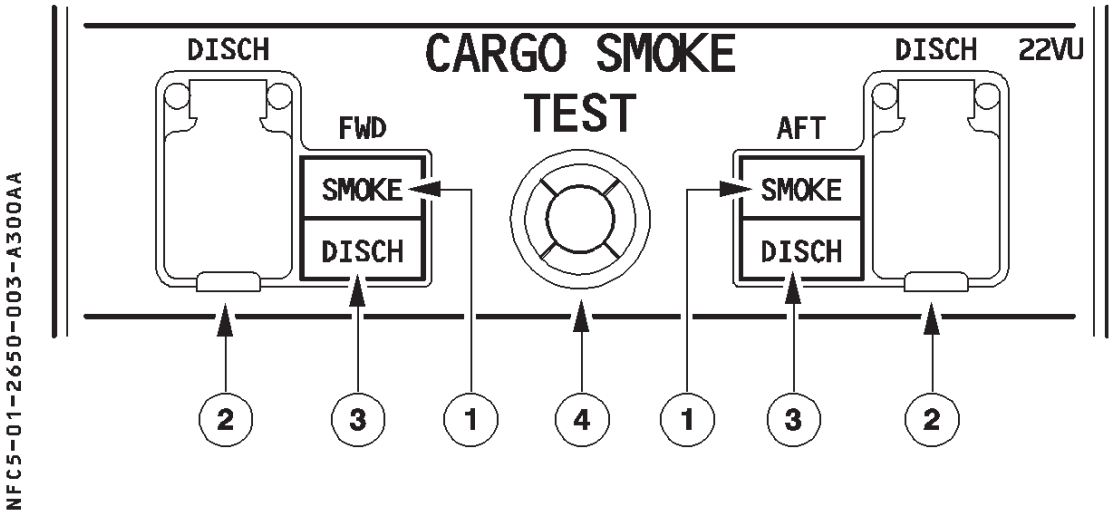

(1) SMOKE light

This red light, and the associated ECAM warning, come on when the system detects smoke in the indicated compartment. This light comes on, if :
– Both channels detect smoke, or
– One channel detects smoke and the SDCU finds that the other channel is faulty.

(2) DISCH pushbutton

This button ignites the squib to discharge the extinguishing agent in the corresponding compartment (FWD or AFT).

(3) DISCH light

R Within 60 seconds after pressing the discharge pushbutton, this amber light comes on,
R thereby indicating that the agent bottle has fully discharged.

(4) TEST pushbutton

Pressing this button for at least 3 seconds, and until it is released :
– Tests the smoke detectors in sequence,
– Turns on the red smoke lights twice, and displays the ECAM warning,
– Turns on the amber DISCH lights.

WARNINGS AND CAUTIONS

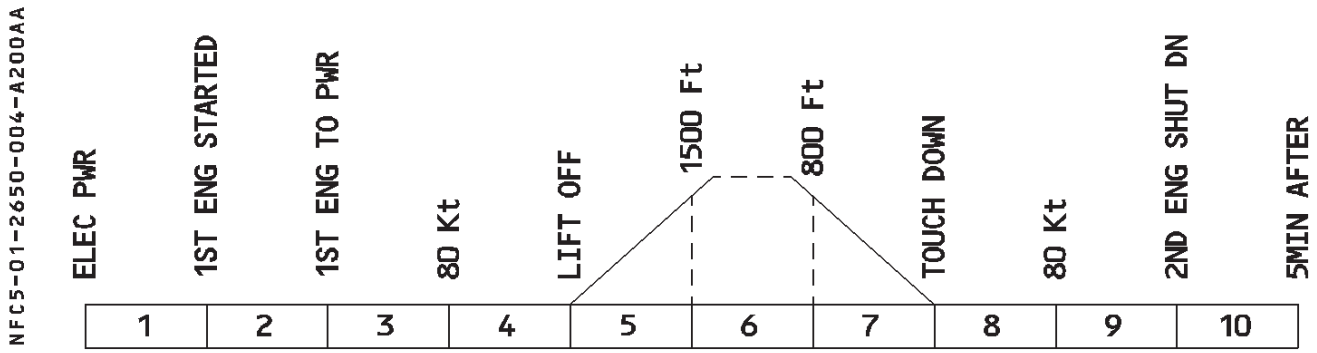

R

E / WD: FAILURE TITLE conditions	AURAL WARNING	MASTER LIGHT	SD PAGE CALLED	LOCAL WARNING	FLT PHASE INHIB
FWD (AFT) CARGO SMOKE Smoke detected	CRC	MASTER WARN	COND	SMOKE lt on CARGO SMOKE panel	4, 5, 7, 8
FWD (AFT) CRG DET FAULT Smoke detection fault	NIL	NIL	NIL	NIL	3, 4, 5, 7, 8
LAV + CRG DET FAULT Both SDCU channels failed	SINGLE CHIME	MASTER CAUTION			
FWD (AFT) BTL SQUIB FAULT Forward or aft bottle squib failed					4, 5, 7, 8

CONTROLS AND INDICATORS

OVERHEAD PANEL

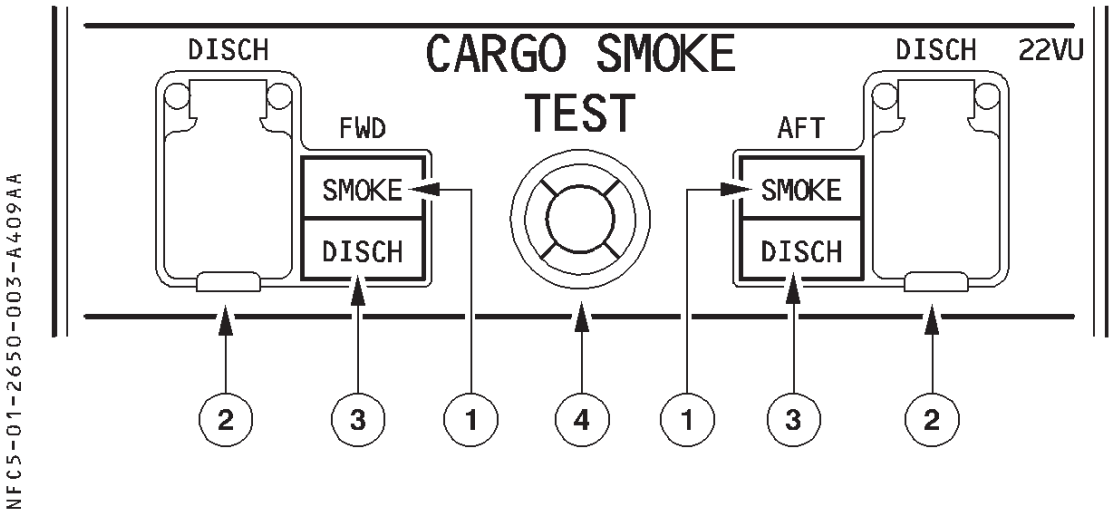

① SMOKE light

This red light, and the associated ECAM warning, come on when the system detects smoke in the indicated compartment. This light comes on, if :
– Both channels detect smoke, or
– One channel detects smoke and the other channel is faulty.

② DISCH pushbutton

This button ignites the squib to discharge the extinguishing agent in the corresponding compartment (FWD or AFT).

③ DISCH light

Within 60 seconds after pressing the discharge pushbutton, this amber light comes on, thereby indicating that the agent bottle has fully discharged.

④ TEST pushbutton

Pressing this button for at least 3 seconds, and until it is released :
– Tests the smoke detectors in sequence,
– Turns on the red smoke lights twice, and displays the ECAM warning,
– Turns on the amber DISCH lights.

WARNINGS AND CAUTIONS

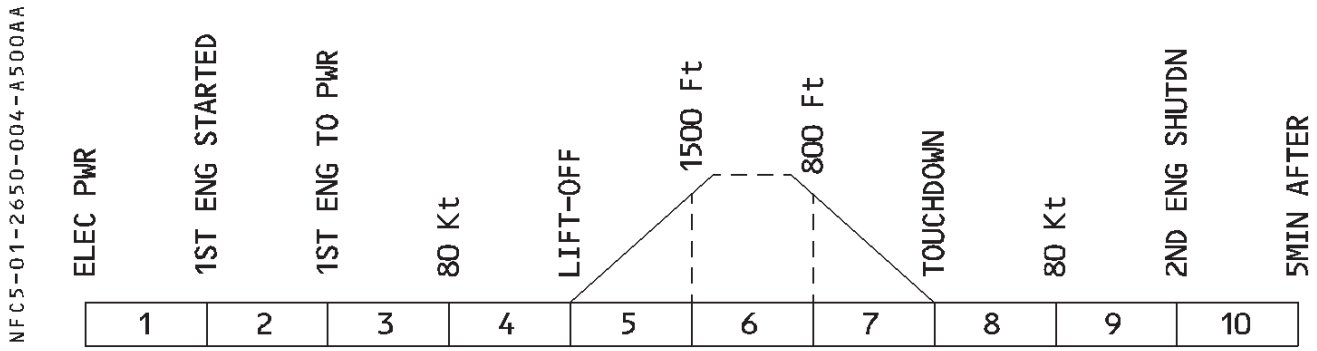

R

E / WD: FAILURE TITLE conditions	AURAL WARNING	MASTER LIGHT	SD PAGE CALLED	LOCAL WARNING	FLT PHASE INHIB
FWD (AFT) CARGO SMOKE Smoke detected	CRC	MASTER WARN	COND	SMOKE lt on CARGO SMOKE panel	4, 5, 7, 8
FWD (AFT) CRG DET FAULT Smoke detection fault	NIL	NIL	NIL	NIL	3, 4, 5, 7, 8
LAV + CRG DET FAULT Both CIDS Smoke Detection Functions are failed.	SINGLE CHIME	MASTER CAUTION			
FWD (AFT) CRG BTL (1)(2 ◁) FAULT Forward or aft bottle squib failed or bottle on low pressure.					4, 5, 7, 8

CONTROLS AND INDICATORS

OVERHEAD PANEL

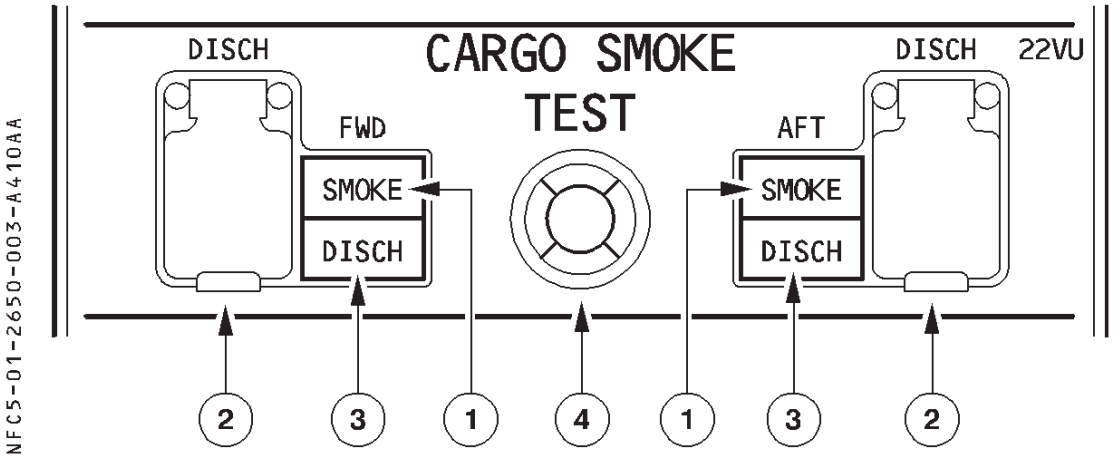

(1) SMOKE light

This red light, and the associated ECAM warning, come on when the system detects smoke in the indicated compartment. This light comes on, if :
– Both channels detect smoke, or
– One channel detects smoke and the SDCU finds that the other channel is faulty.

(2) DISCH pushbutton

This button ignites the squib to discharge the extinguishing agent in the corresponding compartment (FWD or AFT).

(3) DISCH light

R Within 60 seconds after pressing the discharge pushbutton, this amber light comes on,
R thereby indicating that the agent bottle has fully discharged.

(4) TEST pushbutton

Pressing this button for at least 3 seconds, and until it is released :
– Tests the smoke detectors in sequence,
– Turns on the red smoke lights twice, and displays the ECAM warning,
– Closes the ventilation system's isolation valves.
– Turns on the amber DISCH lights.

WARNINGS AND CAUTIONS

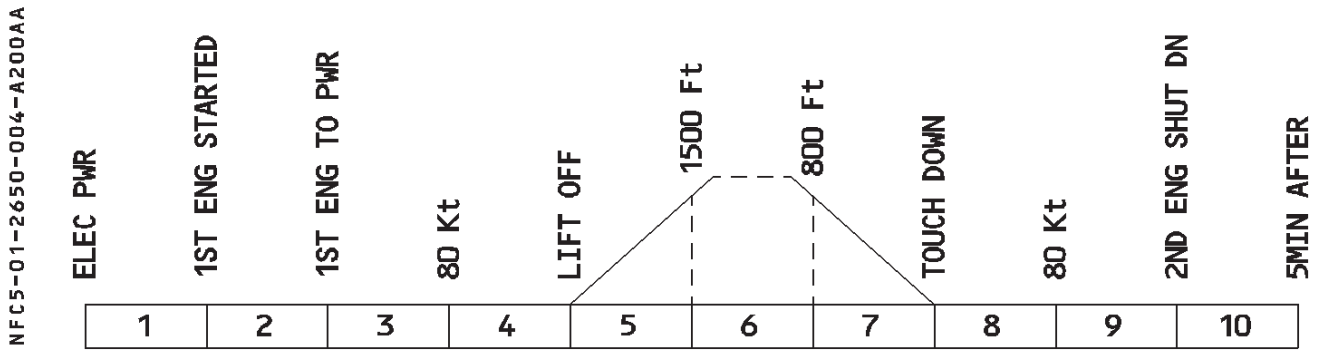

R

E / WD: FAILURE TITLE conditions	AURAL WARNING	MASTER LIGHT	SD PAGE CALLED	LOCAL WARNING	FLT PHASE INHIB
FWD (AFT) CARGO SMOKE Smoke detected	CRC	MASTER WARN	COND	SMOKE lt on CARGO SMOKE panel	4, 5, 7, 8
FWD (AFT) CRG DET FAULT Smoke detection fault	NIL	NIL	NIL	NIL	3, 4, 5, 7, 8
LAV + CRG DET FAULT Both SDCU channels failed	SINGLE CHIME	MASTER CAUTION			
FWD (AFT) BTL SQUIB FAULT Forward or aft bottle squib failed					4, 5, 7, 8

CONTROLS AND INDICATORS

OVERHEAD PANEL

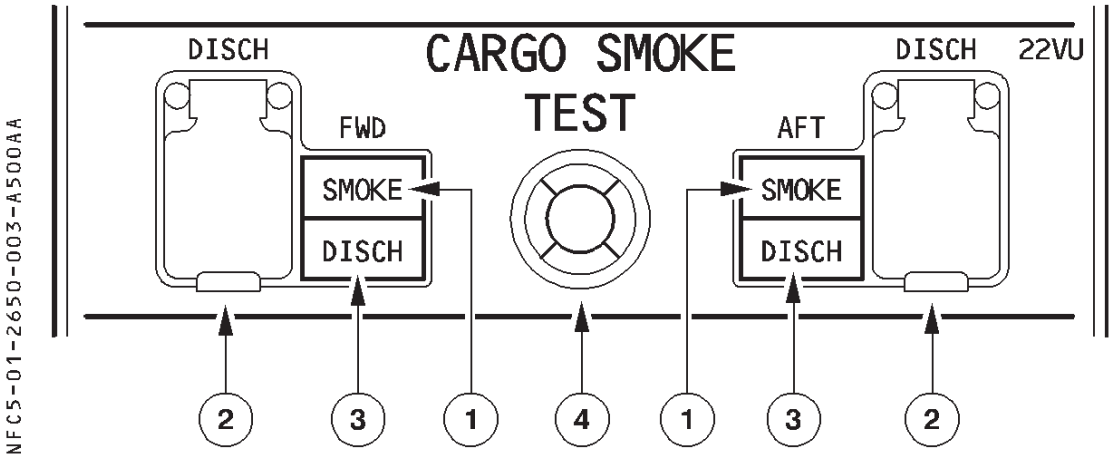

① SMOKE light

This red light, and the associated ECAM warning, come on when the system detects smoke in the indicated compartment. This light comes on, if :
– Both channels detect smoke, or
– One channel detects smoke and the other channel is faulty.

② DISCH pushbutton

This button ignites the squib to discharge the extinguishing agent in the corresponding compartment (FWD or AFT).

③ DISCH light

Within 60 seconds after pressing the discharge pushbutton, this amber light comes on, thereby indicating that the agent bottle has fully discharged.

④ TEST pushbutton

Pressing this button for at least 3 seconds, and until it is released :
– Tests the smoke detectors in sequence,
– Turns on the red smoke lights twice, and displays the ECAM warning,
– Closes the ventilation system's isolation valves.
– Turns on the amber DISCH lights.

WARNINGS AND CAUTIONS

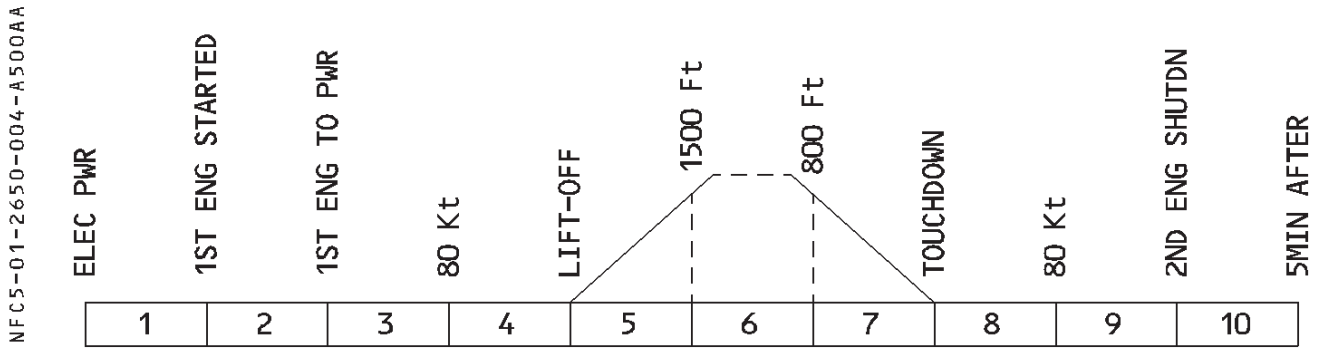

R

E / WD: FAILURE TITLE conditions	AURAL WARNING	MASTER LIGHT	SD PAGE CALLED	LOCAL WARNING	FLT PHASE INHIB
FWD (AFT) CARGO SMOKE Smoke detected	CRC	MASTER WARN	COND	SMOKE lt on CARGO SMOKE panel	4, 5, 7, 8
FWD (AFT) CRG DET FAULT Smoke detection fault	NIL	NIL	NIL	NIL	3, 4, 5, 7, 8
LAV + CRG DET FAULT Both CIDS Smoke Detection Functions are failed.	SINGLE CHIME	MASTER CAUTION			
FWD (AFT) CRG BTL (1)(2 ◁) FAULT Forward or aft bottle squib failed or bottle on low pressure.					4, 5, 7, 8

CONTROLS AND INDICATORS

OVERHEAD PANEL

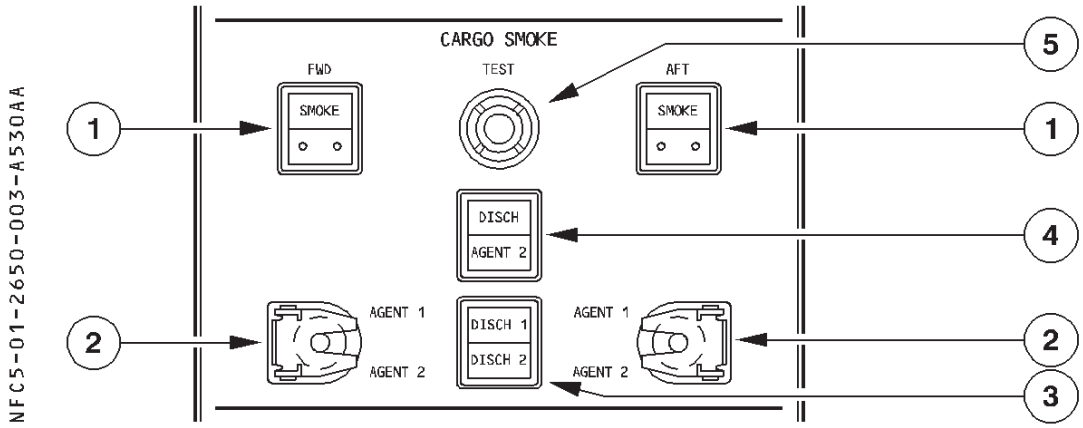

(1) SMOKE light

This red light, and the associated ECAM warning, come on when the system detects smoke in the indicated compartment. This light comes on, if :
– Both channels detect smoke, or
– One channel detects smoke and the other channel is faulty.

(2) DISCH toggle switch

The guarded toggle switch permits ignition of the corresponding squib for discharge of extinguishing agent 1(2) in the respective compartment (FWD or AFT).

(3) DISCH light

This amber light comes on when the bottle has discharged. DISCH 1 appears within 60 seconds after Agent 1 activation, whereas DISCH 2 appears approximately 40 minutes after Agent 2 activation.

(4) DISCH AGENT 2 light

This light comes on amber, 60 minutes after the discharge of Agent 1 in either the FWD or AFT cargo compartment. It goes off, when the Agent 2 squib is ignited.

(5) TEST pushbutton

Pressing this button for at least 3 seconds, and until it is released :
– Tests the smoke detectors in sequence,
– Turns on the red smoke lights twice, and displays the ECAM warning,
– Closes the ventilation system's isolation valves ◁ .
– Turns on the amber DISCH lights.

WARNINGS AND CAUTIONS

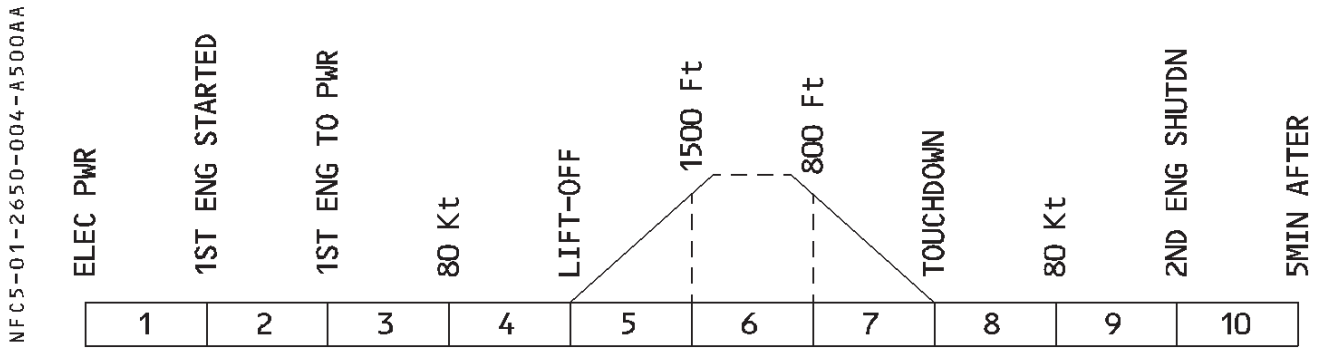

R

E / WD: FAILURE TITLE conditions	AURAL WARNING	MASTER LIGHT	SD PAGE CALLED	LOCAL WARNING	FLT PHASE INHIB
FWD (AFT) CARGO SMOKE Smoke detected	CRC	MASTER WARN	COND	SMOKE lt on CARGO SMOKE panel	4, 5, 7, 8
FWD (AFT) CRG DET FAULT Smoke detection fault	NIL	NIL	NIL	NIL	3, 4, 5, 7, 8
LAV + CRG DET FAULT Both CIDS Smoke Detection Functions are failed.	SINGLE CHIME	MASTER CAUTION			
FWD (AFT) CRG BTL (1)(2 ◁) FAULT Forward or aft bottle squib failed or bottle on low pressure.					4, 5, 7, 8

BUS EQUIPMENT LIST

R

			NORM		EMER ELEC		
			AC	DC	AC ESS	DC ESS	HOT
ENG/APU	FIRE DETECTION	ENG 1 LOOP A				X	
		ENG 1 LOOP B		DC2			
		ENG 2 LOOP A		DC2			
		ENG 2 LOOP B				X	
		APU LOOP A		DC BAT			
		APU LOOP B		DC BAT			
	FIRE EXTINGUISHING	ENG 1/2					
		BTL 1 SQUIB A					HOT 1
		BTL 1 SQUIB B					HOT 2
		BTL 2 SQUIB A		DC 2			
		BTL 2 SQUIB B		DC 2			
		APU					
		BTL SQUIB A					HOT 1
		BTL SQUIB B		DC BAT			
		AUTO EXT		DC BAT			
CARGO LAVATORIES		SDCU CH 1				SHED	
		SDCU CH 2		DC 2			
		FWD/AFT CARGO EXTING BOTTLES		DC BAT			

BUS EQUIPMENT LIST

R

			NORM		EMER ELEC		
			AC	DC	AC ESS	DC ESS	HOT
ENG/APU	FIRE DETECTION	ENG 1 LOOP A				X	
		ENG 1 LOOP B		DC2			
		ENG 2 LOOP A		DC2			
		ENG 2 LOOP B				X	
		APU LOOP A		DC BAT			
		APU LOOP B		DC BAT			
		AUTO EXT		DC BAT			
	FIRE EXTINGUISHING	ENG 1/2					
		BTL 1 SQUIB A					HOT 1
		BTL 1 SQUIB B					HOT 2
		BTL 2 SQUIB A		DC 2			
		BTL 2 SQUIB B		DC 2			
		APU					
		BTL SQUIB A					HOT 1
		BTL SQUIB B		DC BAT			
		AUTO EXT		DC BAT			
CARGO LAVATORIES		SDCU CH 1				SHED	
		SDCU CH 2		DC 2			
		FWD/AFT CARGO EXTING BOTTLES		DC BAT			

BUS EQUIPMENT LIST

			NORM		EMER ELEC		
			AC	DC	AC ESS	DC ESS	HOT
ENG/APU	FIRE DETECTION	ENG 1 LOOP A				X	
		ENG 1 LOOP B		DC2			
		ENG 2 LOOP A		DC2			
		ENG 2 LOOP B				X	
		APU LOOP A		DC BAT			
		APU LOOP B		DC BAT			
	FIRE EXTINGUISHING	ENG 1/2					
		BTL 1 SQUIB A					HOT 1
		BTL 1 SQUIB B					HOT 2
		BTL 2 SQUIB A		DC 2			
		BTL 2 SQUIB B		DC 2			
		APU					
		BTL SQUIB A					HOT 1
		BTL SQUIB B		DC BAT			
		AUTO EXT		DC BAT			
CARGO LAVATORIES		CIDS CH 1				X	
		CIDS CH 2		DC 2			
		FWD/AFT CARGO EXTING BOTTLES		DC BAT			

BUS EQUIPMENT LIST

			NORM		EMER ELEC		
			AC	DC	AC ESS	DC ESS	HOT
ENG/APU	FIRE DETECTION	ENG 1 LOOP A				X	
		ENG 1 LOOP B		DC2			
		ENG 2 LOOP A		DC2			
		ENG 2 LOOP B				X	
		APU LOOP A		DC BAT			
		APU LOOP B		DC BAT			
		AUTO EXT		DC BAT			
	FIRE EXTINGUISHING	ENG 1/2					
		BTL 1 SQUIB A					HOT 1
		BTL 1 SQUIB B					HOT 2
		BTL 2 SQUIB A		DC 2			
		BTL 2 SQUIB B		DC 2			
		APU					
		BTL SQUIB A					HOT 1
		BTL SQUIB B		DC BAT			
		AUTO EXT		DC BAT			
CARGO LAVATORIES		CIDS CH 1				X	
		CIDS CH 2		DC 2			
		FWD/AFT CARGO EXTING BOTTLES		DC BAT			